CITY OF BATESVILLE
DEVELOPMENT & CONSTRUCTION
STANDARDS MANUAL

CHAPTER 5
WATER SPECIFICATIONS

TABLE OF CONTENTS

Section	*Subject*	*Page*
5.1	GENERAL	5-1
5.1.1	Water Main Construction, Connection to Water Main	5-1
5.1.2	References	5-1
5.2	DESIGN CRITERIA	5-3
5.2.1	Design	5-3
5.3	MATERIAL SPECIFICATIONS	5-3
5.3.1	Product Handling	5-3
5.3.2	Pipe and Fittings	5-3
5.3.3	Joints	5-4
5.3.4	Fittings and Specials	5-5
5.3.5	Valves	5-5
5.3.6	Service Fittings	5-7
5.3.7	Tapping Sleeves	5-8
5.3.8	Valve Boxes	5-8
5.3.9	Fire Hydrants	5-8
5.3.10	Meter	5-9
5.3.11	Polyethylene Encasement	5-9
5.3.12	Flushing Hydrants	5-9
5.4	CONSTRUCTION REQUIREMENTS	5-9
5.4.1	Surface Conditions	5-9
5.4.2	Field Measurement	5-9
5.4.3	Handling	5-10
5.4.4	Pipe Cutting	5-10
5.4.5	Installation of Pipe	5-10
5.4.6	General Trenching	5-13
5.4.7	Removal of Material	5-14
5.4.8	Joint Deflection	5-14
5.4.9	Placing and Laying	5-15
5.4.10	Covering Ends	5-16

TABLE OF CONTENTS (cont'd)

Section	*Subject*	*Page*
5.4.11	Stabilization	5-16
5.4.12	Backfilling	5-16
5.4.13	Compaction Testing	5-18
5.4.14	Jointing	5-19
5.4.15	Setting Valves and Valve Boxes	5-19
5.4.16	Restraining	5-20
5.4.17	Hydrant Locations	5-20
5.4.18	Testing and Inspecting	5-20
5.4.19	Record Drawings	5-23

LIST OF FORMS

Title	*Form No.*
Water Project Inspection Checklist	W-A
Pressure Leakage Test	W-B

LIST OF DRAWINGS

Title	*Drawing No.*
Fire Hydrant Assembly (Type I)	W-1
Fire Hydrant Assembly (Type II)	W-2
Fire Hydrant Assembly (Type III)	W-3
Fire Hydrant Assembly (Type V)	W-4
Typical Fire Hydrant Installation Detail	W-5
General Location of Fire Hydrants (Reference to Curb and Sidewalk)	W-6
General Location of Fire Hydrants (Reference to Streets)	W-7
Hydrant Drainage Pit Detail	W-8
Butterfly Valve Installation	W-9
Typical Gate Valve and Box	W-10
Round Way Connection	W-11
Restraint of Bends	W-12
Restraining Valves on Dead Ends	W-13
Restraint of Tees	W-14
Length and Method of Restraint	W-15
Methods of Restraining	W-16
Rod Restraint	W-17
Tie Rods, Nuts & Washers	W-18
Typical Curb Valve Installation Detail	W-19
Water Service Connection	W-20
Typical Residential Water Meter Pit Installation	W-21
Commercial/Industrial Meter Pit Installation	W-22
Water Main Air Valve Structure	W-23
Type J Waterproof Manhole Frame with Bolted Lid	W-24
Rigid Pipe Bedding Detail "Class A"	W-25
Rigid Pipe Bedding Detail "Class B"	W-26
Rigid Pipe Bedding Detail "Class C"	W-27

LIST OF DRAWINGS (cont'd)

Title	*Drawing No.*
Water Main Trench Detail	W-28
Backfill Requirements (within R/W for Improved Streets)	W-29
Backfill Requirements (For Crossing R/W for Improved Streets)	W-30

SECTION 5.1: GENERAL

5.1.1 WATER MAIN CONSTRUCTION, CONNECTION TO PUBLIC WATER MAIN

A. Notify Batesville Water Utility not less than seventy-two (72) hours before the start of construction. Batesville Water Utility reserves the right to inspect all new water main or service installations for compliance with the standards.

5.1.2 References

A. ASME B31.3 - Process Piping

B. ASTM B88 - Standard Specification for Seamless Copper Water Tube

C. ASTM D1238 - Standard Test Method for Melt Flow Rates of Thermoplastics by Extrusion Plastometer

D. ASTM D1505 - Standard Test Method for Density of Plastics by the Density-Gradient Technique

E. ASTM D1556 - Standard Test Method for Density and Unit Weight of Soil in Place by the Sand-Cone Method

F. ASTM D1557 - Standard Test Methods for Laboratory Compaction Characteristics of Soil Using Modified Effort (56,000 ft-lbf/ft^3(2,700 kN-m/m^3))

G. ASTM D2167 - Standard Test Method for Density and Unit Weight of Soil in Place by the Rubber Balloon Method

H. ASTM D2241 - Standard Specification for Poly(Vinyl Chloride) (PVC) Pressure-Rated Pipe (SDR Series)

I. ASTM D2922 - Standard Test Methods for Density of Soil and Soil-Aggregate in Place by Nuclear Methods (Shallow Depth)

J. ASTM D3017 - Standard Test Method for Water Content of Soil and Rock in Place by Nuclear Methods (Shallow Depth)

K. ASTM D3139 - Standard Specification for Joints for Plastic Pressure Pipes Using Flexible Elastomeric Seals

L. ASTM F477 - Standard Specification for Elastomeric Seals (Gaskets) for Joining Plastic Pipe

M. AWWA C104/ANSI A21.4 - American National Standard for Cement-Mortar Lining for Ductile-Iron Pipe and Fittings for Water

N. AWWA C105/ANSI A21.5 - American National Standard for Polyethylene Encasement for Ductile-Iron Pipe Systems

O. AWWA C111/ANSI A21.11 - Rubber-Gasket Joints for Ductile-Iron Pressure Pipe and Fittings

P. AWWA C150/ANSI A21.10 - American National Standard for Thickness Design of Ductile-Iron Pipe

Q. AWWA C151/ANSI A21.51 - American National Standard for Ductile-Iron Pipe, Centrifugally Cast, for Water

R. AWWA C153/ANSI A21.53 - American National Standard for Ductile-Iron Compact Fittings, 3 in. Through 24 in. (76 mm Through 610 mm) and 54 in. Through 64 in. (1,400 mm Through 1,600 mm), for Water Service

S. AWWA C502 - Dry-Barrel Fire Hydrants

T. AWWA C504 - Rubber-Sealed Butterfly Valves

U. AWWA C509 - Resilient-Seated Gate Valves for Water-Supply Service

V. AWWA C600 - Standard for Installation of Ductile-Iron Water Mains and their Appurtances

W. AWWA C651 - Disinfecting Water Mains

X. AWWA C800 - Underground Service Line Valves and Fittings

Y. AWWA C900 - Polyvinyl Chloride (PVC) Pressure Pipe, 4 in. through 12 in., for Water Distribution

Z. AWWA C901 - Standard for Polyethylene (PE) Pressure Pipe and Tubing, 1/2 in. (13 mm) Through 3 in. (76 mm), for Water Service

AA. AWWA C905 - Polyvinyl Chloride (PVC) Water Transmission Pipe, Nominal Diameters 14 In. through 36 In.

BB. AWWA C906 - Standard for Polyethylene (PE) Pressure Pipe and Fittings, 4 In. (100 mm) Through 63 In. (1,575 mm), for Water Distribution Distribution and Transmission

SECTION 5.2: DESIGN CRITERIA

5.2.1. DESIGN

A. Water mains shall be designed in accordance with the most current version of 327 IAC Article 8-3 "Public Water Supply Construction Permits." An August 1, 2003 version of 327 IAC Article 8-3 is shown in **Appendix E**

SECTION 5.3: MATERIAL SPECIFICATIONS

5.3.1 PRODUCT HANDLING

A. Care of Pipe Fittings and Accessories:
All materials hauled to the site of construction by the Contractor, including pipe, fittings, valves, hydrants and other accessories shall, unless otherwise directed, be unloaded at the point of delivery, hauled to and distributed at the site of the project by the Contractor. They shall at all times be handled with care to avoid damage. In loading and unloading, they shall be lifted by hoists or slid or rolled on skidways in such manner as to avoid shock. Under no circumstances shall they be dropped. Pipe handled on skidways must not be allowed to roll against pipe already on the ground.

B. Care of Pipe:
Pipe shall be handled so as to avoid damage to its coating, lining and structural integrity. If, however, any part of the coating or lining is damaged, the repair shall be made by the Contractor at his expense in a manner satisfactory to Batesville Water Utility before installation. Any cracks, pipe fractures, or chipped ends shall be removed from the site.

5.3.2 PIPE AND FITTINGS

A. General:
1. Pipe materials 4" size and larger: Use ductile iron, P.V.C., or P.E. pipes.
2. Pipe materials 2” only: Use Type K copper, P.V.C., or P.E. piping.
3. Pipe materials ¾” to 2” size: Use Type K copper.

B. Pipe:
1. Ductile iron pipe:
   a. Comply with AWWA C151/ANSI A-21.51, with working pressure of not less than 150 psi unless otherwise shown or specified.
   b. Use cement mortar lining complying with AWWA C104/ANSI A-21.4.
   c. Design and manufacture pipe for a working pressure of 150 psi plus 100 psi surge and a safety factor of 2 and a depth of cover indicated on the Drawings and specified in this Section. Minimum pressure

class shall be as follows:

Size Range	Pressure Class
4"-12"	350
14"-20"	250
24"	200

2. Polyvinyl Chloride Pipe (P.V.C.):
   a. For 4” & larger pipe: Comply with AWWA C900 and C905 requirements, Class 150-pressure pipe and DR-18 unless otherwise specified.
   b. For 2” pipe only: Comply with ASTM D2241 requirements, with a working pressure of 200 psi and SDR-21 unless otherwise specified.
3. Copper:
   a. Use Type K copper in conformance with ASTM B88.

4. Polyethylene Pipe (P.E):
   a. For 4” & larger pipe: Comply with AWWA C906 requirements with working pressure not less than 160 psi and DR-11 unless otherwise specified.
   b. For 2” pipe only: AWWA C901, CTS SDR-9 (PE 3408), 200psi

5.3.3 JOINTS

A. Ductile iron pipe:
   1. Mechanical joints of the stuffing-box type complying with AWWA C111/ANSI A-21.11; or
   2. Use push on joints complying with AWWA C111/ANSI A-21.11.

B. P.V.C. pipe:
   1. For 4” or larger pipe: Joints shall be of the slip joint type in accordance with AWWA C111 standard for rubber joints.
   2. For 2” pipe only: Use push on joints complying with ASTM D3139, with which the elastomeric ring is manufactured in compliance with ASTM F477
C. Copper pipe:
   1. All buried copper services shall be joined with silver soldered copper, brass compression, or brass treaded fittings prior to the meter.

D. Polyethylene pipe (P.E.):
   1. For 2” pipe or larger: Use thermal butt fusion or electrofusion couplings. Butt fusion bonding shall be performed in accordance with a written bonding procedure specification (BPS) as required by ANSI/ASME B31.3, Chapter VII, paragraph A-328. BPS shall include cutting and facing requirements.
   2.

5.3.4 FITTINGS AND SPECIALS

A. Ductile iron and P.V.C. Pipe (4" and larger):
   1. Use ductile iron fittings and specials suitable for 150 psi pressure rating unless otherwise specified.
   2. For use with mechanical joint pipe, comply with AWWA C150/ANSI A21.10.
   3. For use with push-on joint pipe, comply with AWWA C150/ANSI A21.10 and AWWA C151/ANSI A21.11.
   4. Use cement mortar lining complying with AWWA C104/ANSI A21.4, standard thickness.

B. P.V.C. pipe (2" only):
   1. Use ductile iron fittings and specials suitable for 150 psi pressure rating unless otherwise specified. Threaded pipefittings shall not be allowed

C. Polyethylene Pipe (P.E.)
   1. For pipe 4" and larger: Use a polyethylene flange assembly when transitioning to pipes or appurtenances made of other materials. The polyethylene flange assembly shall consist of a metal backup flange or ring and a polyethylene stub-end or flange adapter in compliance with AWWA C906.
   2. For pipe 2" only: Use brass compression fittings prior to the meter. Threaded pipefittings shall not be allowed.

5.3.5 VALVES

A. Gate valves:
   1. Use gate valves designed for a working pressure of not less than 250 psi.
   2. Provide connections as required for the piping in which they are installed.
   3. Provide a clear waterway equal to the full nominal diameter of the valve, openable by turning counter clockwise (left).
   4. Provide an arrow on the operating nut or wheel, cast in metal, indicating direction of opening.
   5. Shall be manufactured in accordance with AWWA C509.
   6. All ferrous parts shall be made of ductile iron. Bonnet and body metal thickness shall exceed minimum thickness permitted by AWWA C153/ANSI A21.53.
   7. Wedge shall be ductile iron, one-piece, fully encapsulated in synthetic rubber except for guide and wedge nut areas. Synthetic rubber shall be molded in place and bonded to the wedge. Mechanical fasteners are not allowed.
   8. Valves shall be provided with two "O" rings above and one "O" ring below the thrust collar. All stem seals shall be replaceable with the valve wide

open and while subjected to full rated pressure. Stem shall be removable.

9. Valve body and bonnet shall be coated, inside and out, with fusion-bonded epoxy.
10. Bonnet, body, and stuffing box bolts and nuts shall be Series 300 stainless steel and must be installed and tested by the manufacturer.
11. Shall have a full ten (10) year published money-back warranty.
12. Approved manufacturers of resilient wedge gate valves are Mueller, Kennedy, or equal.

B. Check valves:
1. Use check valves designed for a working pressure of not less than 150 psi, or as indicated or directed, with a clear waterway equal to the full nominal diameter of the valve.
2. Use valves designed to permit flow in one direction, when the inlet pressure is greater than the discharge pressure, and to close tightly to prevent return flow when discharge pressure exceeds inlet pressure.
3. Distinctly cast on the body of each valve:
   a. Manufacturer's name, initials, or trademark by which he can be identified readily;
   b. Valve size;
   c. Working pressure;
   d. Direction of flow.
4. Valves 2" and smaller: Provide all bronze.
5. Valves larger than 2":
   a. Provide ductile iron body, bronze mounted, with flanged ends, of the non-slam type;
   b. Provide class 125 flanges complying with ASME B16.1.
6. Valves shall be manufactured in accordance with AWWA C-508
7. Approved manufacturers of check valves are Clow, Mueller, or equal.

C. Butterfly Valves:
1. Butterfly valves shall be manufactured to conform in all respects to the latest revisions of AWWA C504 and coated inside and outside with standard fusion-bonded epoxy coating for water mains. The body, disc, shaft, seats, bearings and operators shall be designed based on Class 150B and may be of the short or long body type. The seat-ring shall be made of rubber, located in the body. The shaft may be of the through type or stub type and shall be marked on the end to indicate the position of the valve disc with respect to the shaft.
2. The valve disc shall be of the corrosion-resistant alloy cast iron. The valves shall be equipped with a stainless steel stop in the body to prevent the disc from rotating through the closed position. The shaft seals shall be of the "split V" or "chevron" type. The operator shall be permanently lubricated and sealed for buried service and shall be equipped with a two-inch square operating nut. The operator shall be constructed such that the valve will open when the nut is turned to the left or in a counter-clockwise direction. Operators for valves sixteen inches and

twenty inches in size may be traveling nut or worm gear type. Operators for twenty-four inch and larger shall be of the worm gear type.

3. All screws, bolts and/or nuts used in the assembly of the valve and exposed to the soil, when buried, shall be made of stainless steel or brass. 4. In general, butterfly valves used in connection with ductile iron pipe shall be equipped with standard mechanical joint ends complete with all accessories.
5. Acceptable butterfly valve manufacturers are Mueller, Pratt, Kennedy, or equal.

5.3.6 SERVICE FITTINGS

A. Curb stops:
   1, All curb stops, 3/4-inch through 2-inch size, shall be ball type valves of extra heavy, all brass construction with inlets and outlets machined and threaded for use with flared or compression joints, and furnished with two (2) coupling nuts, all in accordance with the latest revisions of the AWWA Standard, designated C800, shall have a heavy or thick tee-head operator, and a 90 degree rotation of the plug or ball.
   2. Each stop shall be equipped with a curb box of either cast iron, Buffalo type, arch pattern or 3 inch PVC with cast iron lid.
   3. Curb stops shall have a maximum working pressure of 300 psi.
   4. The following or approved equals are the curb stops which will be accepted for use in connection with water service installations:

Brand Name	Catalog Number
Mueller	B25209R

B. Corporation Stops:
   1. All corporation stops, 3/4-inch thru 2-inches in size, shall be plug or ball type valves of extra heavy, all brass construction, shall have a flat, thick operating head, a 360 degree rotation of the operating head, and plug type valves shall have a washer and adjusting nut on the bottom of the plug, all in accordance with the latest revisions of the AWWA C800.
   2. Corporation stops shall have a maximum working pressure of 100 psi or greater.
   3. The inlet shall be machined and threaded with AWWA / CC Taper threads only, the outlet shall be machined and threaded for use with flared, or compression joints, and furnished with one (1) coupling nut.
   4. The following or approved equals, are the corporation stops that will be accepted for use in connection with water service installations:

Brand Name	Catalog Number
Mueller	H15008
Ford	F1000Q

C. Service Saddles:
   1. The following bronze service saddles or approved equal shall be the only service saddles accepted for use in connection with water service installations.

Brand Name	Catalog Number	Pipe Type
Mueller	H13440 series	C900 PVC
Ford	S90 series	C900 PVC

Brand Name	Catalog Number	Pipe Type
Mueller	H13420	2” IPS
Ford	S70	2” IPS

D. Service Line Coupling:
   1. The following service line couplings, or approved equal, shall be used as necessary during the course of a water service line installation. The coupling shall be a compression connection for CTS O.D. tubing, both ends.

Brand Name	Catalog Number
Mueller	H15403
Ford	C44Q

5.3.7 TAPPING SLEEVES

A. Provide full-size mechanical joint sleeve type coupling or stainless steel heavy-duty band type for existing water mains, furnished with outlet flanged to American 125 standard (ASA series 15):
   1. Coordinate requirements of tapping sleeves with gate valves and other fittings as required.

5.3.8 VALVE BOXES

A. Valve Boxes:
   1. All valve boxes, referred to in these standards, shall be cast iron, screw type boxes or 6 inch PVC C-900 pipe with a cast iron “top hat” style top piece The word "WATER" shall be cast in the lid.
   2. The valve boxes shall be five and one-quarter (5 1/4) inch shaft size and piece type with a round base.

5.3.9 FIRE HYDRANTS

A. Fire hydrants used in the construction of the water main shall be of the traffic model design and shall be made in accordance with the latest revisions of

AWWA C502. They shall have a six (6) inch mechanical joint bell inlet at the base and all jointing accessories. Valves shall be 5 1/4 inch minimum and open to the left (counter-clockwise). operated by the main operating rod. Design shall allow for plugging of drains without excavating. Hydrants shall be equipped with a six (6) inch branch gate valve and box between it and the main to which it is connected. The 4 ½-inch pumper nozzle shall be National Standard Threads. Nozzles to be mechanically attached with ductile iron retainer and sealed with an "O" ring. Nozzle section, upper and lower barrel, and shoe shall be of ductile iron construction. capability by loosening flange bolts.

Fire hydrant coating shall meet the requirements of AWWA C502. Paint color shall be Safety Yellow.

B. Approved manufacturer and model of hydrants is: Mueller A-423 "Super Centurion 250.

5.3.10 METER,

A. When water service connections are made, the Batesville Water Utility will supply the meter, which shall be subject to fees and charges.

5.3.11 POLYETHYLENE ENCASEMENT

A.The polyethylene encasement film shall be 8-mil in thickness and shall meet the requirements of AWWA C105.

5.3.12 FLUSHING HYDRANTS

A. Flushing hydrants shall be used for the purposes of water main flushing only. The manufacturer of a flushing hydrant shall be Mueller Co. The model numbers are: A-411with one 2-1/2inch hose nozzle, A-412, A-408, A-410 or approved equal.

SECTION 5.4: CONSTRUCTION REQUIREMENTS

5.4.1 SURFACE CONDITIONS

A. Examine the areas and conditions under which work of this Section will be performed. Correct all conditions detrimental to timely and proper completion of the Work. Do not proceed until unsatisfactory conditions are corrected.

5.4.2 FIELD MEASUREMENT

A. Make necessary measurements in the field to assure precise fit of items in

accordance with the approved design.

5.4.3 HANDLING

A. Handle pipe accessories so as to ensure delivery to the trench in sound, undamaged condition:
   1. Carry pipe into position; do not drag.
   2. Use nylon slings for lifting, aligning or turning the pipe.

B. Thoroughly clean interior of pipe and accessories before lowering pipe into trench. Keep clean during laying operations by plugging or other method approved by the Batesville Water Utility.

C. Before installation, inspect each piece of pipe and each fitting for defects:
   1. Material found to be defective before or after laying: Replace with sound material meeting the specified requirements.

D. Rubber gaskets: Store in a cool dark place until just prior to time of installation.

5.4.4 PIPE CUTTING

A. Cut pipe neatly and without damage to the pipe.

5.4.5 INSTALLATION OF PIPE

A. Trenching
   1. All poles, fences, sewer, gas, water or other pipes, wires, conduits, manholes, buildings, structures and property in the proximity of any excavation shall be supported and protected from damage by the Contractor during construction.
   2. Wherever sewer, gas, water or other pipes or conduits cross the excavation, the Contractor shall support said pipes and conduits without damage to them and without interrupting their use during the progress of the Work. The manner of supporting such pipes, etc., shall be subject to review by Batesville Water Utility.
   3. All property shall be thoroughly cleaned of all surplus materials, earth and rubbish placed thereon by the Contractor.
   4. The Contractor shall notify Batesville Water Utility and the appropriate utility companies at least seventy-two (72) hours prior to the start of construction.
      a. The Contractor shall coordinate all utility companies location of any existing underground utilities and structures within the site limits.
         c. The Contractor, prior to the start of construction, shall verify the location of any existing underground utilities and structures within the site limits. It is the Contractor's responsibility to make any and all exploratory investigation, which may be necessary to verify or locate the utility pipe, wires, structures and appurtenances of others.
   5. Where service lines are to be constructed across paved roadways, the

service lines shall be installed by the bore and jack method unless otherwise directed by the Batesville Water Utility.

B. Locations
1. Locate water pipe at least ten feet away, horizontally, from sewer pipes (measured edge to edge).
2. Where water lines cross under gravity-flow sewer lines at less than 18 inches vertical separation, replace the sewer pipe and provide ductile iron pressure pipe that is also suitable for sewer service. No ductile iron pipe joint shall be located within 60 inches of the crossing.
3. Do not place water lines in the same trench with sewer lines or electric wiring.
4. Water pipe shall have a minimum of 4 feet of cover

C. Backfill Materials
1. Trench backfill in paved shall be “B” Borrow, sand, Coarse Aggregate No.12, or Flowable fill. The “B”-Borrow, or sand shall comply with Section 211 of the INDOT Standard Specifications, current edition. Coarse Aggregate No.12 material shall comply with Section 904 of the INDOT Standard Specifications, current addition. Flowable fill shall be in accordance with Section 213 of the INDOT Standard Specifications, current edition.
2. Trench backfill in unpaved areas shall be earth backfill material containing no more than 5% organic material, no particles larger than four inches and shall be free of trash, rubble and debris. The Plastic Index of the fraction passing the no. 40 sieve shall not be more than 25.
3. Coarse aggregate material for pavement subbase shall be No. 53 or 73 complying with INDOT standard Specifications, current edition.
4. For all other references, fine granular material shall be sand complying with Section 211 of the INDOT Standard Specifications, current edition or Coarse Aggregate No. 12 stone complying with Section 904 of the INDOT Standard Specifications, current edition.

D. Bedding, Rigid Pipe
1. Each pipe shall be laid in Class "B" bedding unless specifically noted otherwise, as shown on the plans and the construction standard drawings. All costs for bedding shall be included in the cost of the water main pipe.

a. Definition of Terms for Bedding Explanation

Bc = Outside diameter of pipe, in inches

D = Inside diameter of pipe, in inches

d = Depth of bedding material below the pipe bell, in inches

The values of "d", depth of bedding material below the bell of the pipe

shall be as follows:

"D" (inside diameter of pipe, in.)	"d" (depth of bedding material) Minimum Requirements
27" and smaller	3"
30" and larger	4"

2. Class "A" Bedding (Concrete Cradle)
   a. Class "A" bedding is that method of bedding in which the conduit is set on "d" inches of concrete in an earth foundation and encased in concrete up to 1/4" of "Bc" to fit the lower part of the conduit's exterior breadth. The remainder of the conduit is to be surrounded to a height of at least twelve (12) inches above its top by densely compacted granular backfill material carefully placed by hand to completely fill all spaces under and adjacent to the conduit.

      The fill to be tamped thoroughly on each side of the conduit, as far as practicable, shall be in layers not to exceed six (6) inches in thickness.

   b. The concrete used for Class "A" bedding shall be plain concrete with a 28-day compressive strength of 3,000 psi, unless otherwise specified. Refer to "Water Main Construction Details" of the Construction Standards for further details on Class "A" bedding.

3. Class "B" Bedding
   a. Class "B" bedding is that method of bedding in which the conduit is set on "d" inches of a fine granular material in an earth foundation, carefully shaped to fit the lower part of the conduit exterior for a width of at least 60% of the conduit's breadth, and then proceeding to a minimum depth of ½ of the pipe diameter around the pipe. The remainder of the conduit is to be surrounded to a height of at least twelve (12) inches above its top by the fine granular material carefully placed by hand to completely fill all spaces under and adjacent to the conduit. The fill to be tamped thoroughly on each side and under the conduit, as far as practicable, in layers not to exceed six (6) inches in thickness. Bell excavation is to be provided. Refer to "Water Main Construction Details" of the Construction Standards for further details on Class "B" Bedding.

   b. Class "B" bedding material shall meet the gradation as set forth in the INDOT Standard Specifications, current *edition, Section 904.*

4. Class "C" Bedding
   a. Class "C" bedding is that method of bedding in which the conduit is set on an earth foundation, carefully shaped to fit the lower part of the conduit exterior for a width of at least 50% of the conduit's breadth. The remainder of the conduit is to be surrounded to a height of at least twelve (12) inches above its top by lightly compacted granular backfill material

carefully around the exterior of the conduit. Bell excavation is to be provided. Refer to "Water Main Construction Details" of the Construction Standards for further details on Class "C" Bedding.

5.4.6 GENERAL TRENCHING

A. Unless otherwise directed or permitted, not more than one hundred feet (100') of any trench shall be open at any time.

B. Surface encumbrances, located so as to create a hazard to employees involved in excavation work or in the vicinity thereof at any time during operations, shall be removed or made safe before excavating is begun.

C. During excavation, material satisfactory for backfilling shall be stockpiled in an orderly manner at a distance from the banks of the trench sufficient to avoid overloading and to prevent slides and cave-ins. Adequate drainage shall be provided for the stockpiles and surrounding areas by means of ditches, dikes, or other approved methods. The stockpiles shall also be protected from contamination with unsatisfactory excavated material or other material that may destroy the quality and fitness of the suitable stockpiled material. If the Contractor fails to protect the stockpiles and any material becomes unsatisfactory as a result, such material, if directed by the Batesville Water Utility inspector, shall be removed and replaced with satisfactory on-site or imported material from approved sources.

D. Grading shall be done as may be necessary to prevent surface water from flowing into the excavation, and any water accumulating therein shall be removed so that the stability of the bottom and sides of the excavation is maintained. In wet trenches dewatering equipment shall be operated ahead of pipe laying and the water level kept below the pipe invert.

E. The trench shall be excavated as shown in the Standards or as recommended by the manufacturer of the pipe to be installed, whichever is more stringent. Trench walls below and above the top of the pipe shall be sloped, or made vertical, as recommended in the manufacturer's installation manual. The trench width below an elevation one foot above the top of pipe shall not exceed that recommended in the installation manual. Where no manufacturer's installation manual is available, trench walls below an elevation one foot above the top of pipe shall be vertical and trench walls one foot or more above the top of pipe shall be adequately sloped as required to prevent slides and cave-ins unless proper precautions, as stipulated by OSHA, are taken. If adequate trench slopes cannot be provided in the available work space and right-of-way limits, then use of sheeting and shoring and/or a trench box is mandatory.

F. Excavation for manholes or similar structures shall be sufficient to leave at least 12 inches clear between the outer structure surfaces and the face of the excavation or support members and be of sufficient size to permit the placement and removal of forms for the full length and width of structure footings and foundations. When concrete is to be placed in an excavated area, special care shall be taken not to disturb the bottom of the excavation. Excavation to the final grade level shall not be made until just before the concrete is to be placed.

G. Dust conditions shall be kept to a minimum by the use of water. The use of salt, or calcium chloride will not be permitted.

5.4.7 REMOVAL OF MATERIAL

A. As trenches are backfilled, the Contractor shall remove all surplus material, regrade and leave clear, free, and in good order all roadways and sidewalks affected by the construction of the work. During the progress of and until the expiration of the guarantee period, he shall maintain in good and safe conditions the surface or any street over the trenches and promptly fill all depressions over and adjacent to trenches caused by settlement of backfilling.

B. Surplus or unsatisfactory excavated material shall be properly disposed of at a location off the property limits.

5.4.8 JOINT DEFLECTION

A. Ductile iron pipe:
   1. Maximum allowable deflection will be given in AWWA C600.
   2. Table 5.4 shows maximum deflections for 18 foot lengths of pipe. For other lengths, deflection may vary proportionately.

Table 5.4 Ductile Iron Pipe Deflection

Diameter	Push-On Joint Pipe	Mechanical Joint Pipe
4”	19”	31”
6”	19”	27”
8”	19”	20”
10”	19”	20”
12”	19”	20”

   3. If alignment requires deflection exceeding limits shown in Table 5.4, furnish special bends or a sufficient number of shorter lengths of pipe to provide angular deflections within the limits shown.
   4. Locate water mains as shown on the plans. Deviation from plan location must be approved by the Batesville Water Utility inspector prior to installation.

B. Plastic pipe: Unless a lesser amount is recommended by the pipe manufacturer,

maximum allowable deflections from a straight line or grade, or offsets, will be five degrees.

5.4.9 PLACING AND LAYING

A. General:
   1. Lower pipe and accessories into trench by means of derrick, ropes, belt slings.
   2. Do not dump or drop any of the materials of this Section into the trench.
   3. Except where necessary in making connections to other lines, lay pipe with the bells facing in the direction of laying.
   4. Rest the full length of each section of pipe solidly on the pipe bed, with recesses excavated to accommodate bells, couplings, and joints.
   5. Take up and relay pipe that has the grade or joint disturbed after laying.
   6. Do not lay pipe in water, or when trench conditions are unsuitable for the work; keep water out of the trench until jointing is completed.
   7. Securely close open ends of pipe, fittings, and valves when work is not in progress.
   8. Where any part of coating or lining is damaged, replace pipe section or repair to the approval of the Batesville Water Utility inspector.
   9. Ductile Iron pipe, fittings, valves, bolted sleeves, and other components of dissimilar metal when buried in corrosive soils or backfill shall have loose polyethylene encasement film installed in accordance with AWWA C105.

B. Polyethylene and P.V.C. pipe (2” only):
   1. Position pipe and fittings in trench in a manner that identifying markings will be readily visible for inspection.
   2. Cutting and joining:
      a. Protect against abrasion from serrated holding devices.
      b. Remove burrs and glosses from surfaces to be jointed; use abrasive paper, file, or steel wool.
      c. Remove dirt, dust, and moisture by wiping clean with chemical cleaner or dry cloth.
   3. Do not thread plastic pipe; make connections only with the solvent cement or with special adapter fittings designed for the purpose.
   4. Align pipe system components without strain.
   5. Support piping at intervals of not more than four feet, at ends, branch fittings, and change of direction or elevation.
   6. Support plastic pipe in trenches with a 3" layer of sand. Allow no rocks, debris, or potentially damaging substances within 6" of plastic pipe in trenches.
   7. Provide an electrically continuous insulated 10-gauge solid copper insulated tracer wire in the trench above the pipe, fastened to the pipe at 20-foot intervals. The wire shall come above ground every 500’ through a 3” PVC marking post that will be supplied by the Batesville Water Utility. There shall be an 18" minimum lead of wire left at the top of the marking

post. All underground connections shall be made with brass split nuts, and sealed or taped. A one pound anode shall be attached to the tracer wire every 1000 feet. The anode will be supplied by the Batesville Water Utility and billed to the contractor.

C. Connections: Use specials and fittings to suit the actual conditions where connections are made between new work and existing mains. Use only those specials and fittings approved by the Batesville Water Utility.

D. Sleeves:
   1. Where pipe passes through walls of valve pits or structures, provide P.V.C. or cast iron wall sleeves.
   2. Fill annular space between walls and sleeves with rich cement mortar.
   3. Fill annular space between pipe and sleeves with high-grade chaulk

5.4.10 COVERING ENDS

A. Before leaving the Work for the night, during a storm, or for any other reason, care must be taken that the unfinished end of any pipe is securely closed with a tightly fitting cover or plug. Any earth or other material that may find entrance into the pipe, through any such open end of an unplugged pipe shall be removed at the Contractor's expense.

5.4.11 STABILIZATION

A. If portions of the bottom of trenches or excavations consist of material unstable to such a degree that, in the opinion of Batesville Water Utility inspector, it cannot adequately support the pipe or structure, the bottom shall be overexcavated and stabilized with granular material in compliance with the INDOT Standard Specifications, current edition. Depth of stabilization shall be as directed by the Inspector.

5.4.12 BACKFILLING

A. Pipe bedding and initial backfill shall be as shown on the Water Main Construction Details of the Construction Standards. Initial backfill shall be placed in lifts of a maximum of 6 inches loose thickness. The method for placing and compacting the backfill shall comply with the INDOT Standard Specifications as applicable. At a minimum, the Contractor shall use a vibrating plate compactor with adequate “passes” to achieve compaction. The backfill shall be brought up evenly on both sides of pipe for the full length of pipe. Care shall be taken to ensure thorough compaction of the fill under pipe haunches.

B. Final backfill for the remainder of the trenches shall be as follows:
   1. Backfill for trenches under sidewalks, under turfed or seeded areas, and in miscellaneous areas shall be of approved earth material and contain no

stones over four inches (4") in their largest dimensions. Stones which are used in backfilling shall be distributed among the earth backfill so that all interspaces are filled with fine material. All such backfilling shall be deposited in lifts of a maximum 12 inches loose thickness and compacted with a vibrating plate compactor or approved mechanical tamping devices. Excess earth to the amount required to replace settlement shall be neatly rounded over the trench and the remainder hauled off the work site. Trenches shall be maintained by the Contractor until settlement has ceased and trenches remain level with the adjacent ground.

2. Backfill of all trenches under existing or proposed roadways and structural footings or slabs shall be “B” Borrow, Coarse Aggregate No.12, or sand. In addition, the top seven (7) inches below the base of the pavement shall be backfilled with no. 53 or 73 crushed stone unless flowable fill is used for backfilling per item 5.4.12.B.3. The backfill shall be placed in 6" maximum lifts and the method of placing and compacting the backfill shall comply with the INDOT Standard Specifications, as applicable. At a minimum, the Contractor shall use a vibrating plate compactor with adequate “passes” to achieve compaction.

3. Flowable fill shall be used as backfill for trenches under or within five (5) feet of existing city streets as shown on the “Water Main Construction Details” of the Construction Standards. Flowable fill shall be used as required by the City Street Superintendent or on a case by case basis. Flowable fill shall be placed up to the base of the pavement section. Allow a minimum of 24 hours of curing time for the flowable fill prior to placement of the pavement section.

C. Pipe bedding and each backfill lift shall be compacted to a dry density not less than the following percentage of maximum dry density as determined by the Modified Proctor Test (ASTM D1557):

Usage	Compaction %
Beneath piping	95
Upper 2 feet of backfill under roadways	95
Under roadways (except upper 2 feet of backfill)	92
Under haunches and up to springline of pipe	95
From springline to 12 inches above top of pipe	90
Adjacent to (or behind) vertical walls	90
Under turfed or seeded areas below topsoil, and miscellaneous area (from 12” above pipe to surface)	85

D. No fill shall be placed against any structure until placed concrete has been allowed to cure for at least 3 days. Backfill shall be placed in such a manner that the structure will not be damaged by shock from falling earth. The backfill material shall be deposited and compacted as specified for final

backfill, and shall be placed in such a manner as to prevent eccentric loading and excessive stress on the structure. Heavy equipment for spreading and compacting shall not operate closer to foundation walls than set forth as follows.

E. Fill placed adjacent to vertical or near vertical walls (within a zone defined by imaginary lines extending horizontally away from the base of the wall for a distance of three feet and thence upward and outward on a one to one slope to the elevation of the top of the wall) shall be compacted to the specified density with light equipment not exceeding 1500 pounds in static weight or dynamic rated impact.

5.4.13 COMPACTION TESTING

A. Sampling and testing shall be the responsibility of the Contractor. Tests shall be performed by an approved commercial testing laboratory or may be tested with approved facilities furnished by the Contractor.

B. Laboratory tests for moisture-density relations shall be determined in accordance with ASTM D1557. A minimum of one test shall be performed on each different type of material used for backfill.

C. Field In-Place Density Tests:
   1. Shall be performed in sufficient numbers to ensure that the specified compaction is being obtained. A minimum of one test per lift of backfill for every 200 feet of installation shall be performed. Locations for performing the density tests will be coordinated with the Batesville Water Utility inspector.

   2. Shall be determined in accordance with ASTM D1556, ASTM D2167 or ASTM D2922. When ASTM D2922 is used, the calibration curves shall be checked and adjusted using only the sand cone method as per ASTM D1556. ASTM D2922 results in a wet unit weight of soil and when using this method, ASTM D3017 shall be used to determine the moisture content of the soil. The calibration curves furnished with the moisture gages shall be checked along with density calibration checks as described in ASTM D3017. The calibration checks of both the density and moisture gages shall be made at the beginning of a job, on each different type of material encountered and at intervals as directed by Batesville Water Utility inspector. Copies of calibration curves and results of calibration tests shall be furnished to the Batesville Water Utility inspector.

D. All test results shall be submitted to the Batesville Water Utility inspector.

E. Trenches improperly compacted shall be reopened to the depth directed by the inspector and then refilled and compacted to the density specified.

Field in-place density tests shall also be repeated for improperly compacted trenches that are reopened, refilled and recompacted. A minimum of one repeat test per lift of backfill for every 200 feet of improperly compacted trench that is reopened, refilled and recompacted shall be performed.

5.4.14 JOINTING

A. Pipe joints:
   1. Ductile iron pipe, mechanical joints, and push-on type joints: Install in accordance with AWWA C600, modified as necessary by the recommendation of ductile iron pipe.
   2. Make connections between different types of pipes and accessories with transition fittings.
   3. Rubber gaskets: Handle, lubricate where necessary, and install in strict accordance with the recommendations of the manufacturer.
   4. Polyethylene Pipe and quality assurance. The pipe and fittings manufacturer shall have an established quality control program responsible for inspecting incoming materials and outgoing pipe and fittings and components. Incoming polyethylene materials shall be inspected for density per ASTM D1505 and melt flow rate per ASTM D1238, and contamination. The supplier shall certify all incoming materials. Certifications shall be verified by the pipe manufacturer and submitted to the Engineer.

5.4.15 SETTING VALVES AND VALVE BOXES

A. General:
   1. Center valve boxes on the valves, setting plumb.
   2. Tamp earth fill around each valve box to a distance of four feet on all sides, or to the undisturbed trench face if less than four feet.
   3. Tighten stuffing boxes, and fully open and close each valve to assure that all parts are in working condition.

B. Service boxes:
   1. Where water lines are located below paved streets having curbs, install boxes directly back of the curbs.
   2. Where no curbing exists, install boxes in accessible locations beyond limits of street surfacing, walks, and driveways or as shown on the drawings.

5.4.16 RESTRAINING

A. General:
   1. Acceptable methods of restraining joints, fittings, bends, and valves below grade shall be as follows.

      a. Restrainers for PVC pipe shall be manufactured by Uni-Flange, Series 900, 1300, 1350, 1390, Mega-Lug, or approved equal.

      b. MJ restraining glands for D.I. pipe shall be manufactured by EBAA Iron, Series 1200; Romac Industries, Style MJR6; or approved equal.

      c. Provide stainless steel nuts, bolts, and rods for the stainless steel tie bolt restraining system or approved equal Use Romac "Ductile Lug" or approved equal in lieu of eye bolts.

B. Installation:
   1. Refer to the "Water Main Construction Details" of the Construction Standards for determining the proper location and amount of required restraint.

5.4.17 HYDRANT LOCATIONS

A. Fire hydrants shall be located as shown on the "Water Main Construction Details" of the Construction Standards.

B. Flushing hydrants shall be used for the purpose of flushing water mains. Flushing hydrants shall be located on the dead ends of water mains of less than 6 inches in diameter, or in locations where standard fire hydrants are not required but water main flushing is needed.

5.4.18 TESTING AND INSPECTING

A. Contractor shall notify Batesville Water Utility at least forty-eight (48) hours in advance of starting construction to make arrangements for inspection and shut-down of existing water main, where required.

B. All pressure and leakage tests shall conform to the latest revisions of AWWA standards or the Batesville Water Utility specifications, as herein defined, whichever is most stringent.

C. Closing uninspected work: Do not allow or cause any of the work of this Section to be covered up or enclosed until after if has been completely inspected by the Batesville Water Utility inspector.

D. Hydrostatic tests:

1. Where any section of a water line is provided with concrete thrust blocking for fittings, do not make hydrostatic tests until at least five days after installation of the concrete thrust blocking, unless otherwise directed by the Batesville Water Utility inspector.
2. Devise a method for disposal of waste water from hydrostatic tests, and for disinfection, as approved in advance by the Batesville Water Utility inspector.

E. Pressure tests:
1. After the pipe is laid, the joints completed, fire hydrants permanently installed, and the trench backfilled, subject the newly laid piping and valved sections of water distribution and service piping to a hydrostatic pressure of 150 psi for a minimum period of two hours.
2. Valves within the test segment shall not be operated in either direction at a differential pressure exceeding the rated valve working pressure.
3. Replace or remake joints showing visible leakage.
   a. Remove cracked pipe, defective pipe, and cracked or defective joints, fittings, and valves. Replace with sound material and repeat the test until results are satisfactory.
   b. Make repair and replacement without additional cost to the Owner.
4. The pressure in the water main shall not vary more than 5± psi during the 2-hour test.

F. Leakage test:
1. Conduct leakage test.
2. Duration of each leakage test: At least two hours.
3. During the test, subject water lines to a pressure of 150psi with no more than 5± psi variance during the test period.
4. Leakage is defined as the quantity of water to be supplied into the newly laid pipe, or any valved or approved section thereof, necessary to maintain the specified leakage test pressure after the pipe has been filled with water and the air expelled.
   a. No piping installation will be accepted until the leakage is less than the number of gallons per hour as determined by the following table:

TABLE 5.4.18: Allowable Leakage per 1,000 Feet of Pipeline at 150 PSI Test Pressure (Gallons per hour)			
Size	Leakage	Size	Leakage
4"	0.37	14"	1.29
6"	0.55	16"	1.47
8"	0.74	18"	1.66
10"	0.92	20"	1.84
12"	1.10	24"	2.21
		30"	2.76

Above table based on Mechanical or Push-On joint with 18-foot nominal lengths. For pipe with 20-foot nominal lengths, multiply above leakage by 0.9.

b. Should any test of pipe disclose leakage greater than that specified in Table 5.4.18, locate and repair the defective joint or joints until the leakage is within the specified allowance, and at no additional cost to the Owner.
c. Allowable leakage may also be determined by the allowable leakage formula as detailed in the AWWA Standards.

G. Time for making test:
1. Except for joint material setting, or where concrete reaction backing necessitates a five day delay, pipelines jointed with rubber gaskets, mechanical, or pushon joints, or couplings may be subjected to hydrostatic pressure, inspected, and tested for leakage at any time after partial completion of backfill.

H. Disinfection:
1. Before acceptance of the potable water system, disinfect each unit of completed water supply, distribution, and service line in accordance with AWWA C651.
2. Perform all such tests and disinfection in a manner approved by IDEM and the Batesville Water Utility.
3. Furnish copies of two consecutive satisfactory bacteriological analysis from an independent laboratory to the Batesville Water Utility inspector, as required by IDEM.
4. The method of chlorination shall be in accordance with AWWA C651, unless approved otherwise by the Batesville Water Utility inspector in advance.

5.4.19 RECORD DRAWINGS

A. No water system shall be accepted by the City of Batesville unless the installer provides at least two sets of “As Built” drawings. The “As Built” drawings shall show the actual location of the water mains, valves, hydrants and any other appurtenances. All measurements shall be referenced to permanent landmarks. The results of all testing shall also be submitted. “As-Built” drawings and test results shall be certified by a registered engineer.

END OF SECTION

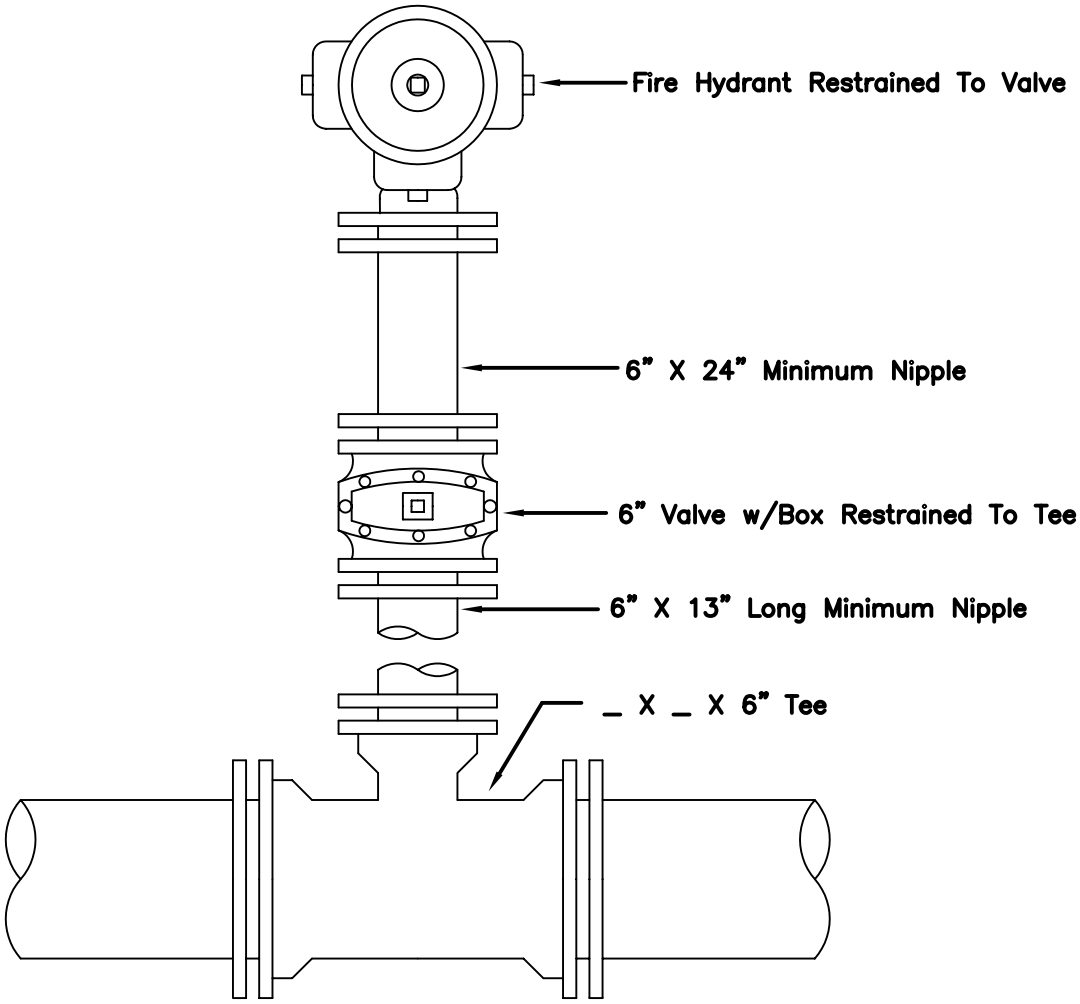

NOTE:
This Arrangement Can Be Used On All Sizes Of Mains

BATESVILLE WATER UTILITY

WATER MAIN CONSTRUCTION DETAILS		
FIRE HYDRANT ASSEMBLY (TYPE I)		
SCALE: NONE	DATE: AUG. 2004	DWG. NO. W-1

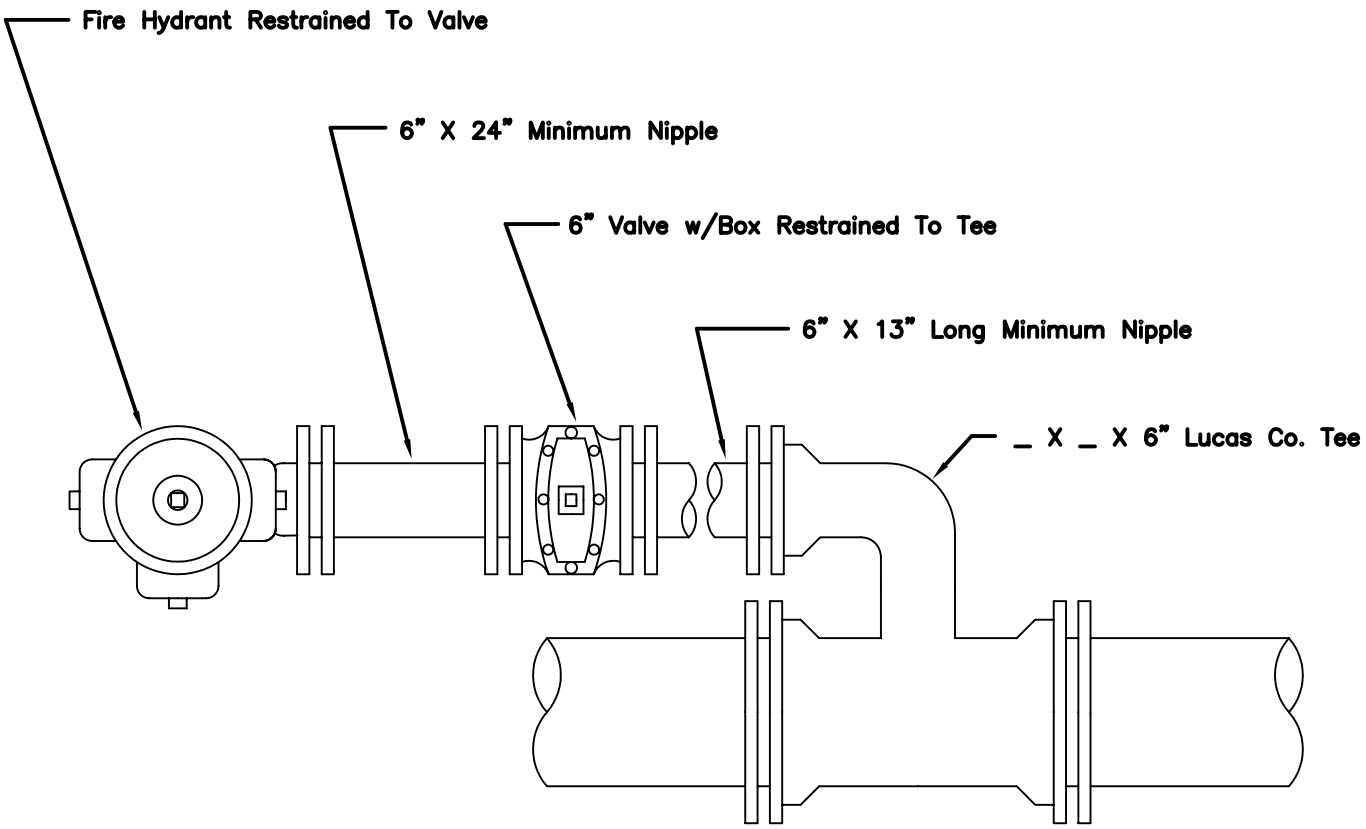

NOTE:
This Arrangement Can Be Used On All Mains To And Including 12" In Size

BATESVILLE WATER UTILITY

WATER MAIN CONSTRUCTION DETAILS		
FIRE HYDRANT ASSEMBLY (TYPE II)		
SCALE: NONE	DATE: AUG. 2004	DWG. NO. W-2

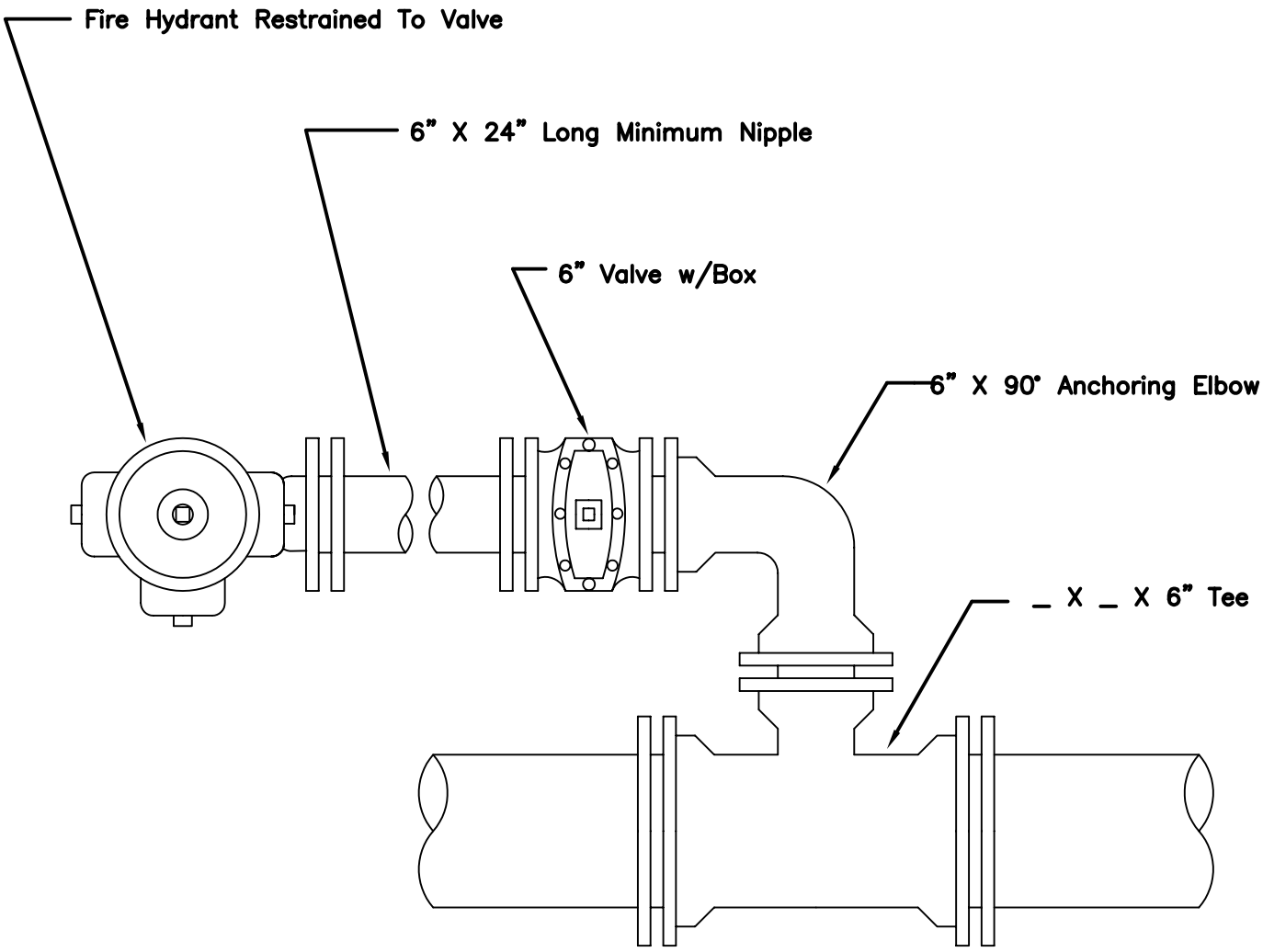

NOTE:
This Arrangement Can Be Used On All Sizes Of Mains

BATESVILLE WATER UTILITY

WATER MAIN CONSTRUCTION DETAILS

FIRE HYDRANT ASSEMBLY (TYPE III)

SCALE: NONE	DATE: AUG. 2004	DWG. NO. W-3

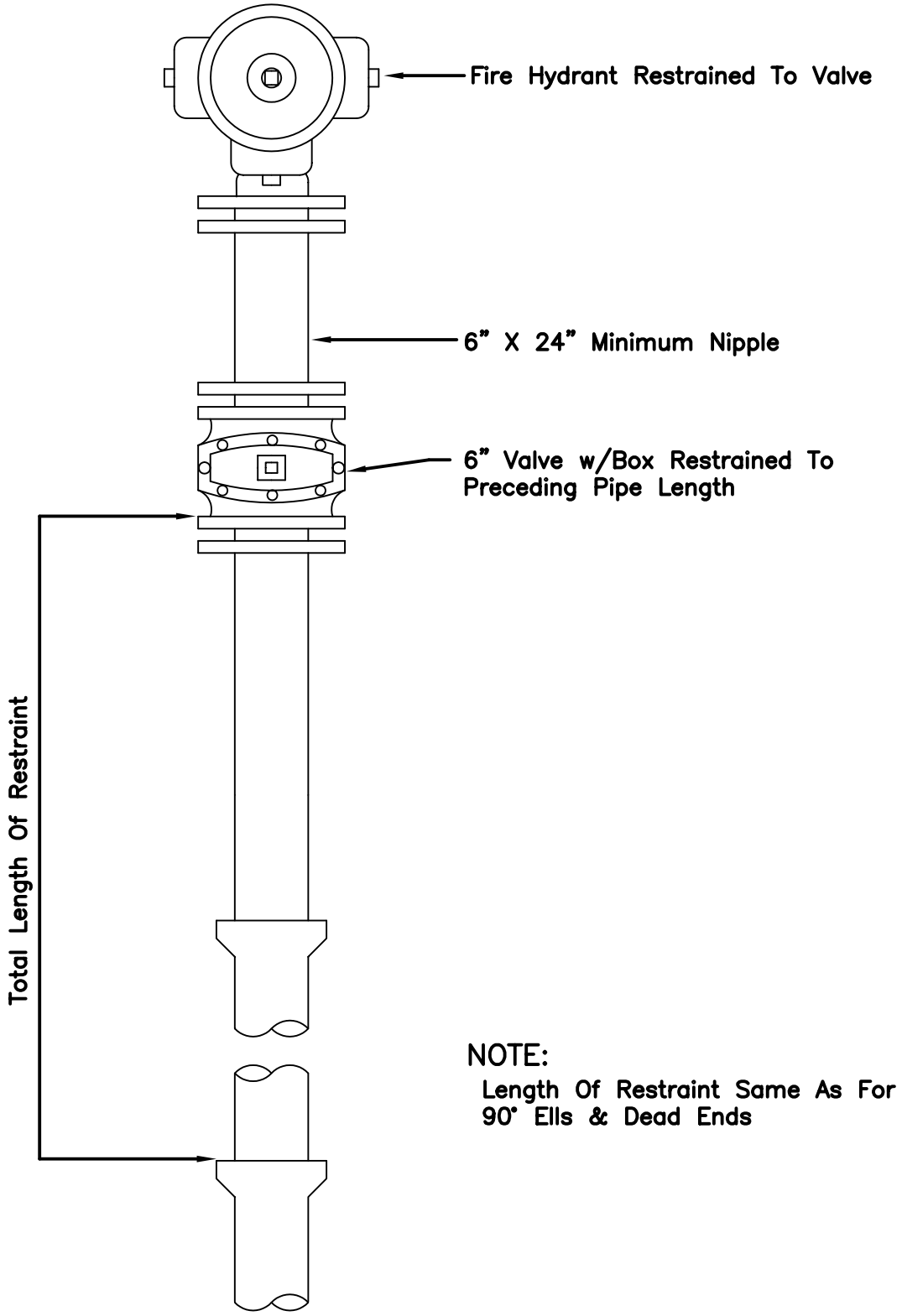

NOTE:
Length Of Restraint Same As For 90° Ells & Dead Ends

BATESVILLE WATER UTILITY

WATER MAIN CONSTRUCTION DETAILS

FIRE HYDRANT ASSEMBLY (TYPE V)

SCALE: NONE	DATE: AUG. 2004	DWG. NO. W-4

MARKING POST DETAILS

3" PVC MARKING POST INSTALLED EVERY 500 FT. SUPPLIED BY BATESVILLE WATER AND BILLED TO THE CONTRACTOR. LEAVE A MINIMUM OF 18" OF WIRE IN THE TOP OF THE MARKING POST.

ALL UNDERGROUND CONNECTIONS MUST BE MADE WITH BRASS SPLIT NUTS, & SEALED OR TAPED.

A 1 LB. ANODE MUST BE ATTACHED TO THE TRACER WIRE EVERY 1000 FT. SUPPLIED BY BATESVILLE WATER & BILLED TO THE CONTRACTOR.

ALL TRACER SHALL BE # 10 GAUGE SOLID COPPER INSULATED WIRE.

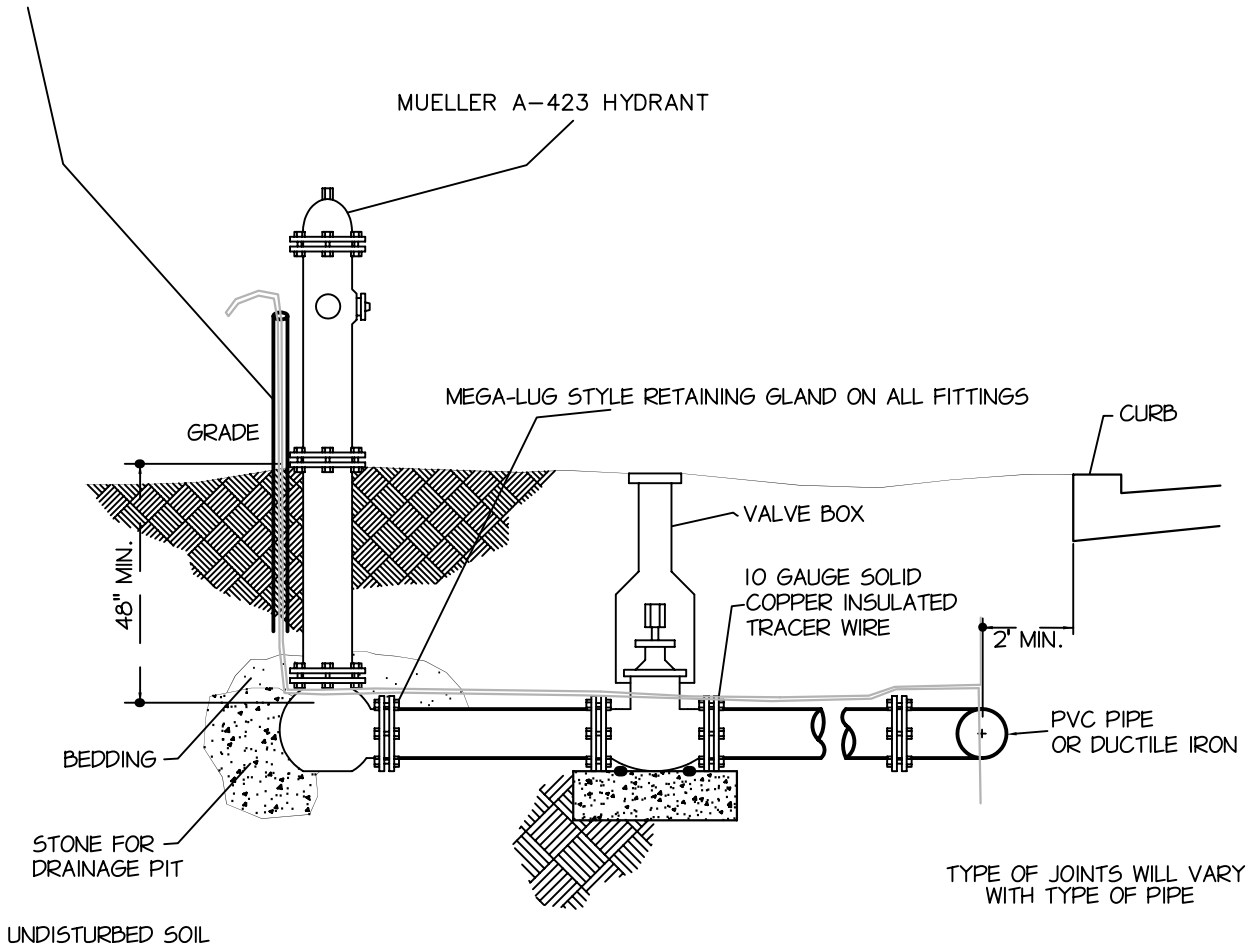

BATESVILLE WATER UTILITY

WATER MAIN CONSTRUCTION DETAILS

TYPICAL FIRE HYDRANT INSTALLATION DETAIL

SCALE: NONE	DATE: AUG. 2004	DWG. NO. W-5

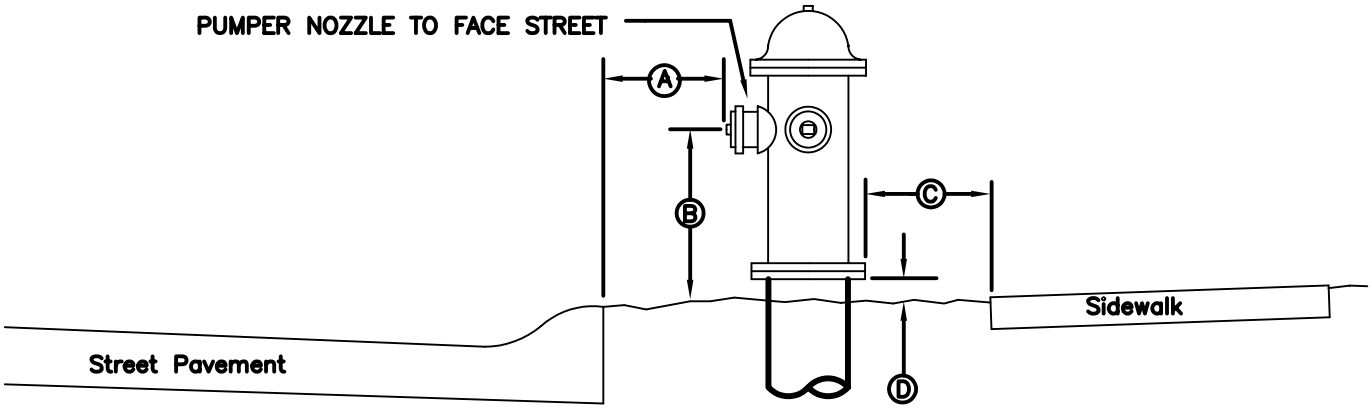

(A.) Pumper Nozzle Min. 3'–6", Max. 4'–0" From Back Of Curb.

(B.) Pumper Nozzle Min. 1'–7", Max. 2'–1" Above Ground Line.

(C.) No Part Of Hydrant Closer Than 6" To Sidewalk.

(D.) Min.2", Max.8" Above Grade To Flange Or Ground Line Mark On Hydrant.

NOTES:

1) Fire Hydrant Assembly Item To Include, Fire Hydrant, Auxilary Valve & Riser Box, And All Tees, Fittings, Pipes, Etc. To And Include Main Tee.

2) Where Fire Hydrants Must Be Located In A Paved Area, Knock–out Blocks A Minimum Of 5'X 5' With Expansion Joints On All Sides Are To Be Provided.

BATESVILLE WATER UTILITY

WATER MAIN CONSTRUCTION DETAILS

GENERAL LOCATION OF FIRE HYDRANTS
(REFERENCE TO CURB AND SIDEWALK)

SCALE: NONE	DATE: AUG. 2004	DWG. NO. W-6

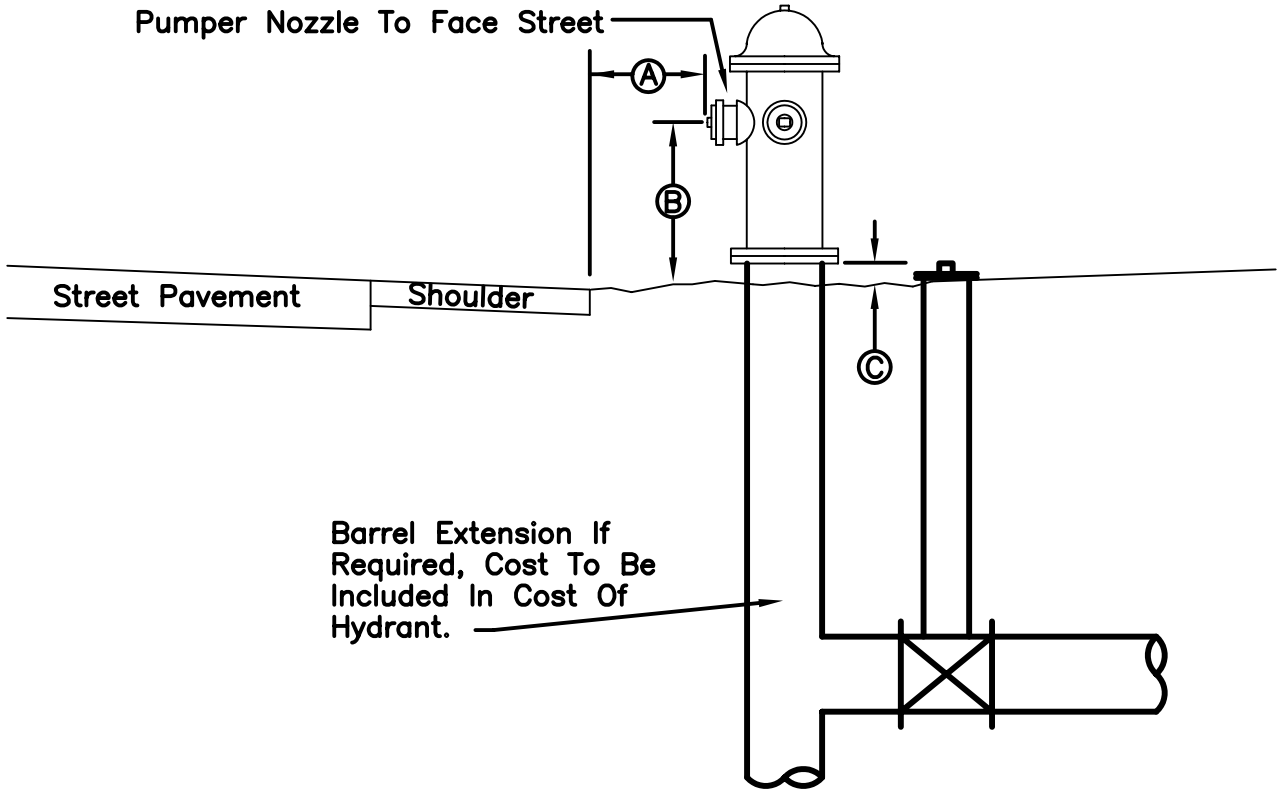

(A.) Pumper Nozzle Min. 3'–6", Max. 4'–0" From The Closer Of: Street Edge or Shoulder.

(B.) Pumper Nozzle Min. 1'–7", Max. 2'–1" Above Ground Line.

(C.) Min. 2",Max. 8" Above Grade to Flange or Ground Line Mark on Hydrant.

NOTES:

1) Fire Hydrant Assembly Item To Include, Fire Hydrant, Auxilary Valve & Riser Box, And All Tees, Fittings, Pipes, Etc. To And Include Main Tee.

2) Where Fire Hydrants Must Be Located In A Paved Area, Knock–out Blocks A Minimum Of 5'X 5' With Expansion Joints On All Sides Are To Be Provided.

BATESVILLE WATER UTILITY

WATER MAIN CONSTRUCTION DETAILS

GENERAL LOCATION OF FIRE HYDRANTS (REFERENCE TO STREET)

SCALE: NONE	DATE: AUG. 2004	DWG. NO. W-7

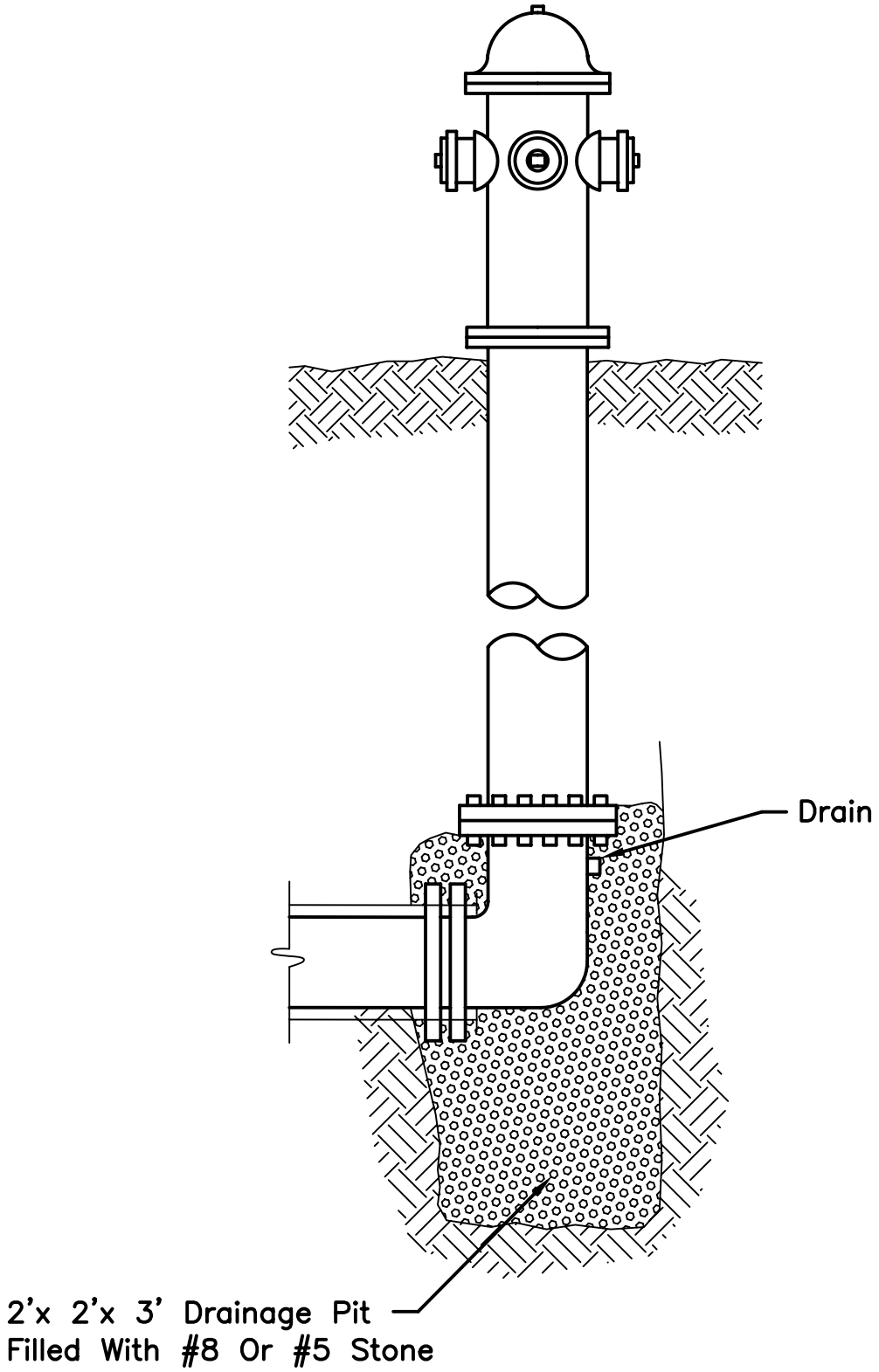

BATESVILLE WATER UTILITY

WATER MAIN CONSTRUCTION DETAILS

HYDRANT DRAINAGE PIT DETAIL

SCALE: NONE	DATE: AUG. 2004	DWG. NO. W-8

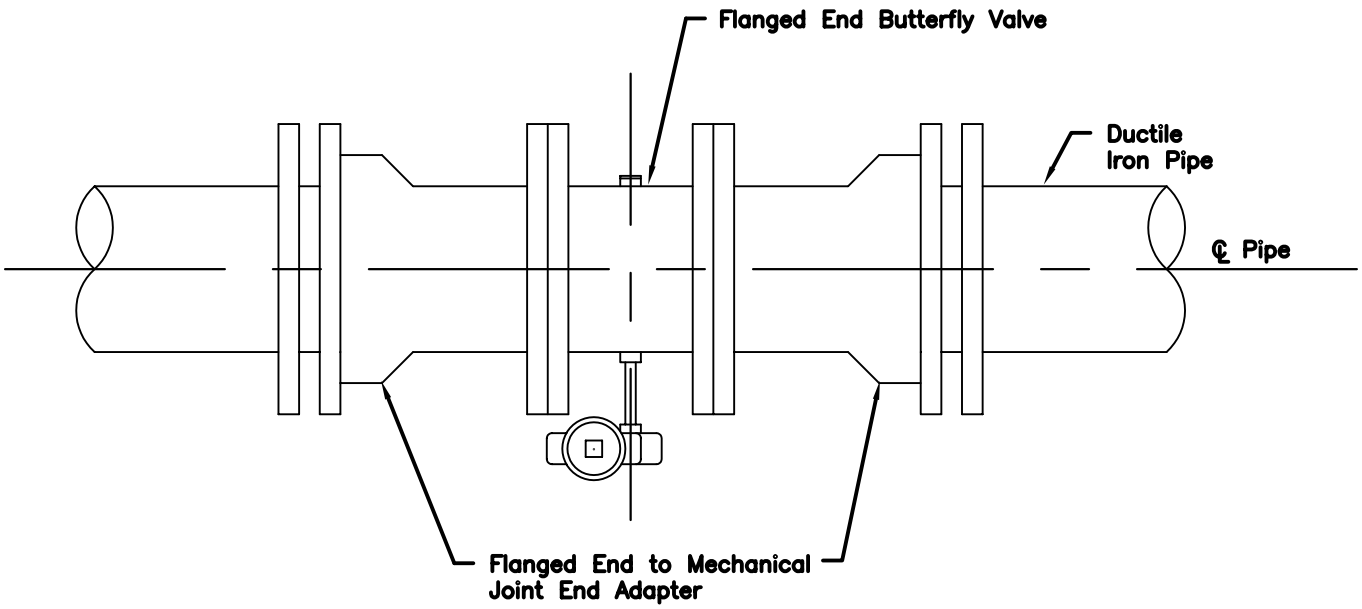

BATESVILLE WATER UTILITY

WATER MAIN CONSTRUCTION DETAILS

BUTTERFLY VALVE INSTALLATION

SCALE: NONE	DATE: AUG. 2004	DWG. NO. W-9

MARKING POST DETAILS

3" PVC MARKING POST INSTALLED EVERY 500 FT. SUPPLIED BY BATESVILLE WATER AND BILLED TO THE CONTRACTOR. LEAVE A MINIMUM OF 18" OF WIRE IN THE TOP OF THE MARKING POST.

ALL UNDERGROUND CONNECTIONS MUST BE MADE WITH BRASS SPLIT NUTS, & SEALED OR TAPED.

A 1 LB. ANODE MUST BE ATTACHED TO THE TRACER WIRE EVERY 1000 FT. SUPPLIED BY BATESVILLE WATER & BILLED TO THE CONTRACTOR.

ALL TRACER SHALL BE # 10 GAUGE SOLID COPPER INSULATED WIRE.

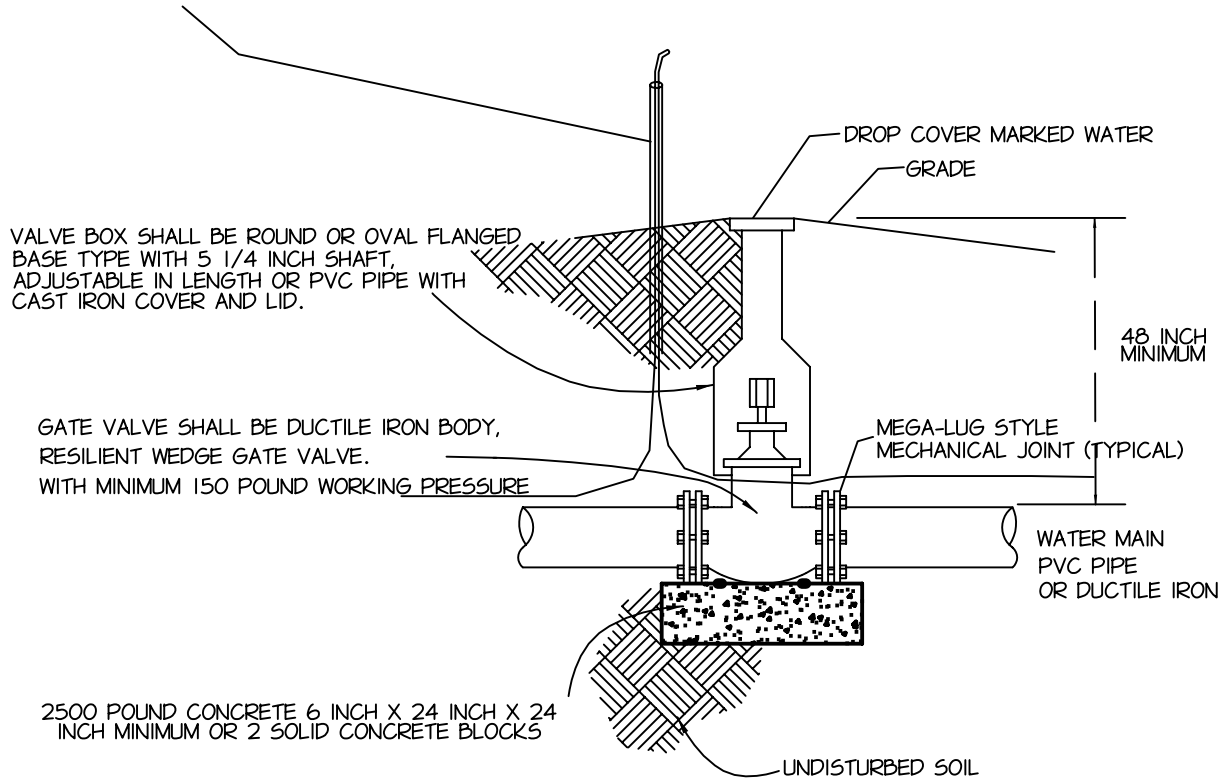

NOTE: ALL GATE VALVES TO HAVE RESILIENT SEAL

BATESVILLE WATER UTILITY

WATER MAIN CONSTRUCTION DETAILS

TYPICAL GATE VALVE AND BOX

SCALE: NONE	DATE: AUG. 2004	DWG. NO. W-10

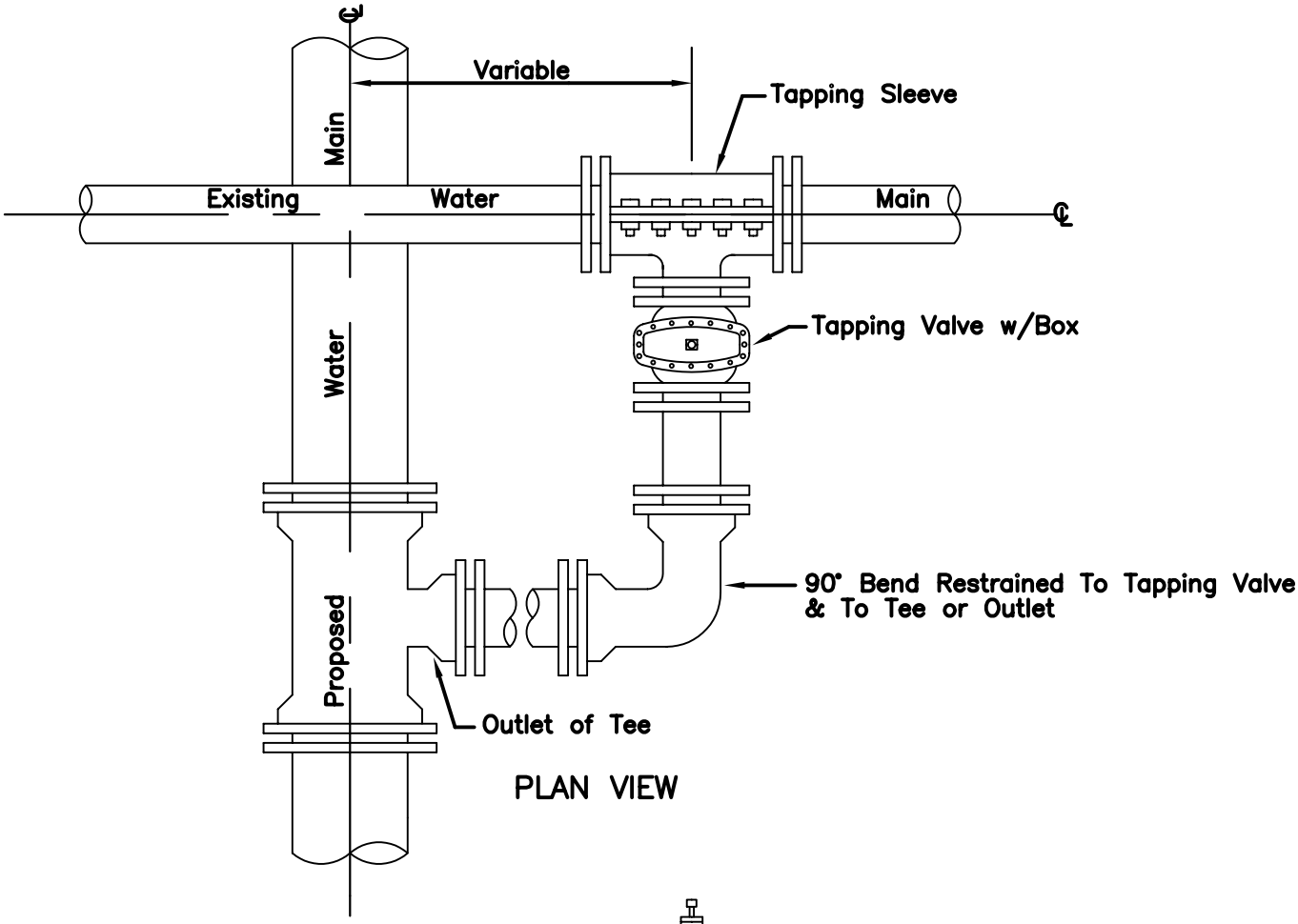

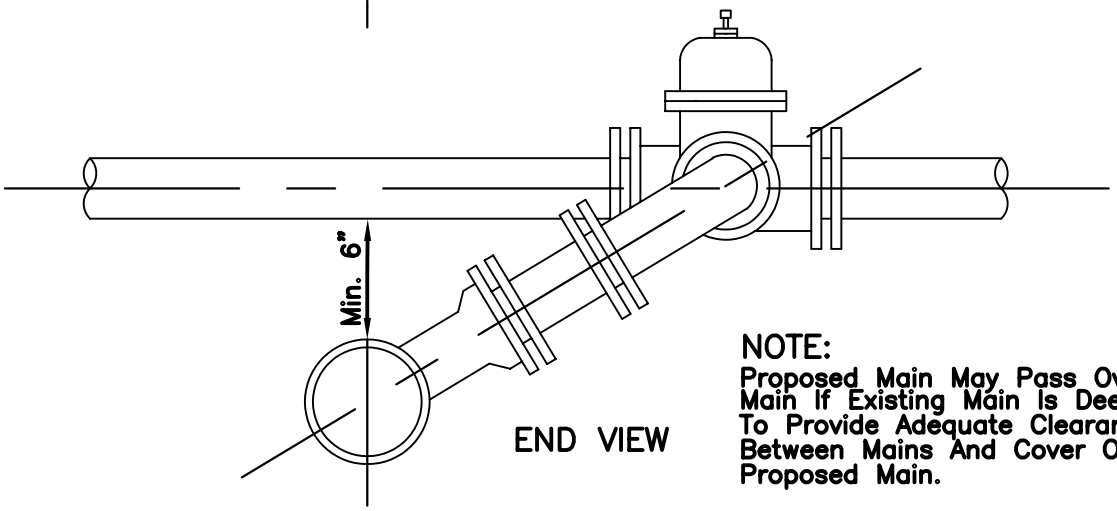

NOTE:
Proposed Main May Pass Over Existing Main If Existing Main Is Deep Enough To Provide Adequate Clearance Between Mains And Cover Over Proposed Main.

BATESVILLE WATER UTILITY

WATER MAIN CONSTRUCTION DETAILS

ROUND WAY CONNECTION

SCALE: NONE	DATE: AUG. 2004	DWG. NO. W-11

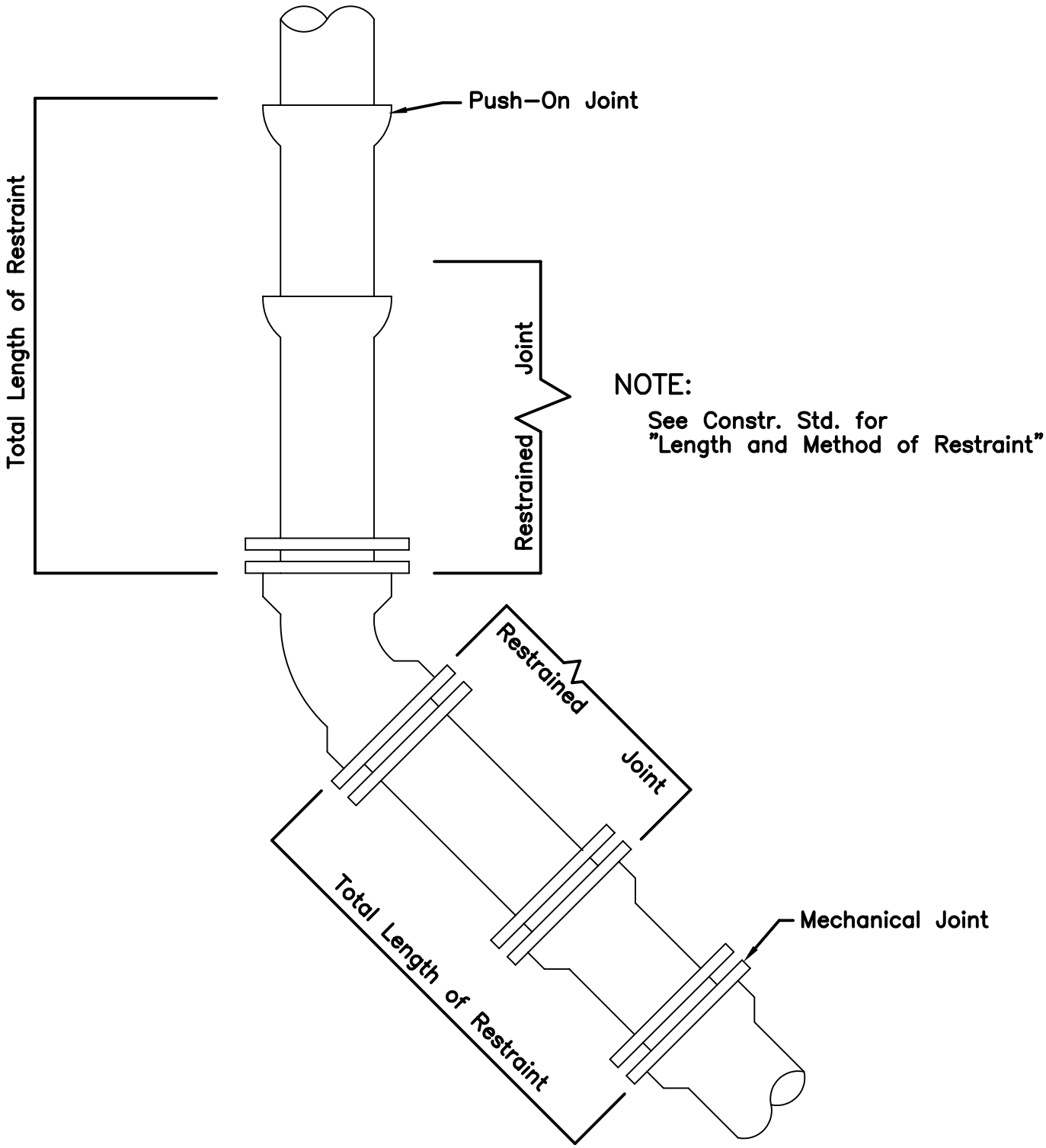

NOTE:

See Constr. Std. for "Length and Method of Restraint"

BATESVILLE WATER UTILITY

WATER MAIN CONSTRUCTION DETAILS

RESTRAINT OF BENDS

SCALE: NONE	DATE: AUG. 2004	DWG. NO. W-12

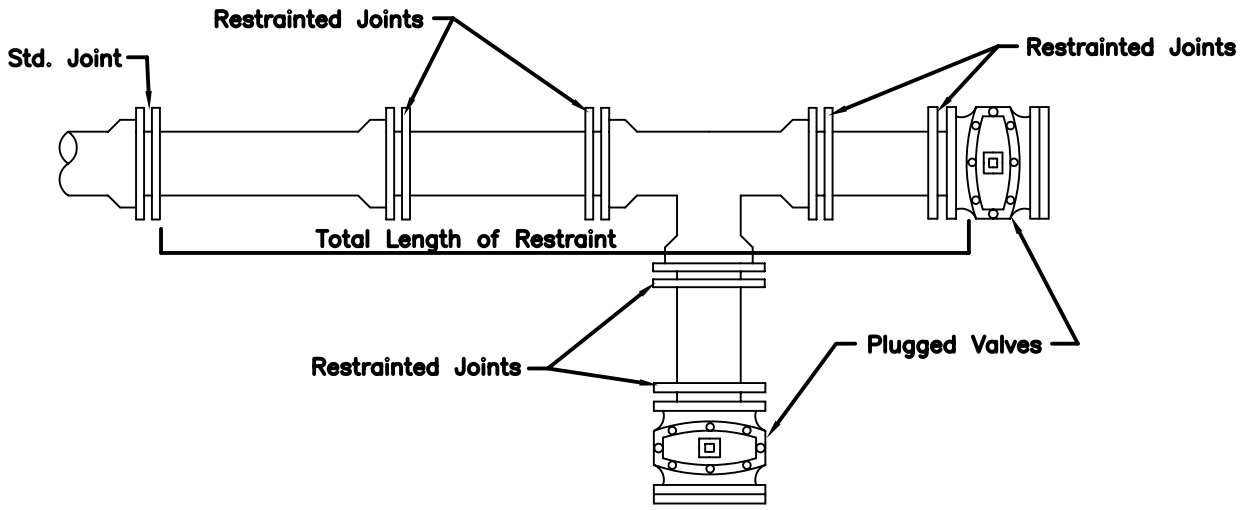

DEAD ENDS OF TEES

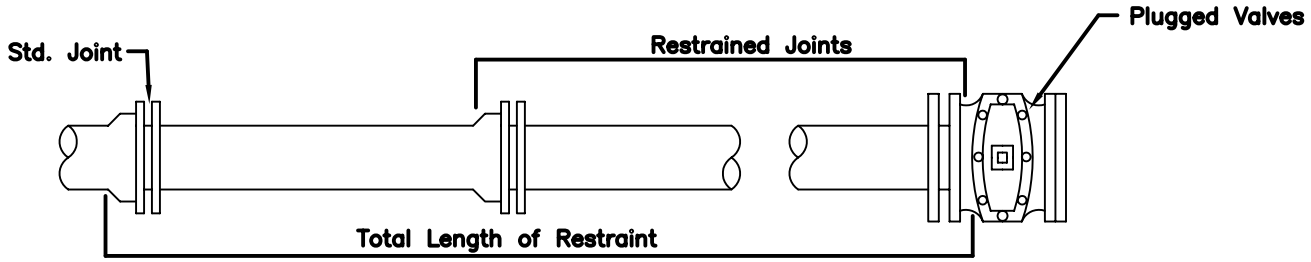

DEAD ENDS OF MAINS

NOTE:

Length of Restraint same as for 90° Bends & Dead ends. See Constr. Std. "Length and Method of Restraint"

BATESVILLE WATER UTILITY

WATER MAIN CONSTRUCTION DETAILS

RESTRAINING VALVES ON DEAD ENDS

SCALE: NONE	DATE: AUG. 2004	DWG. NO. W-13

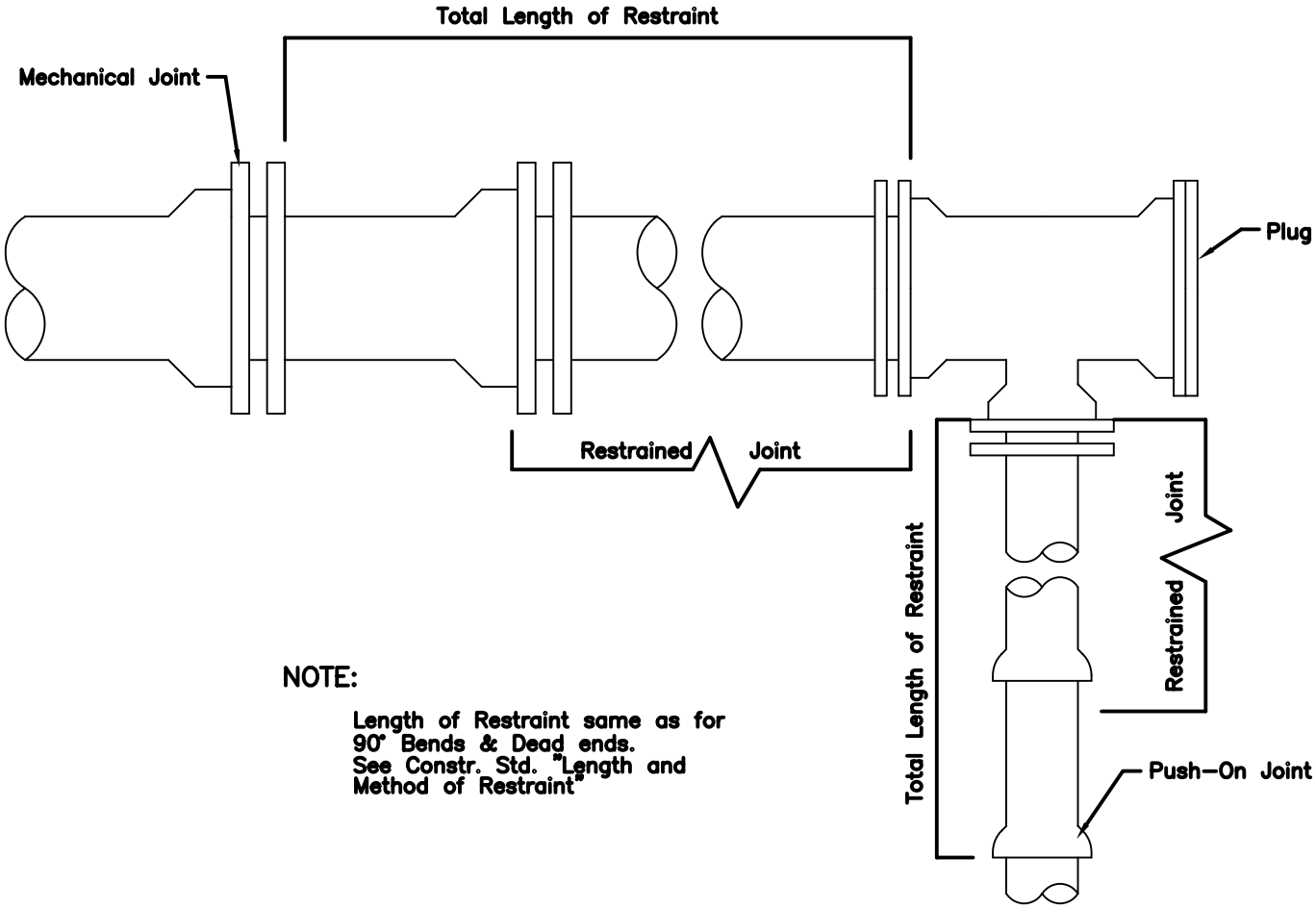

NOTE:

Length of Restraint same as for 90° Bends & Dead ends.
See Constr. Std. "Length and Method of Restraint"

BATESVILLE WATER UTILITY

WATER MAIN CONSTRUCTION DETAILS

RESTRAINT OF TEES

SCALE: NONE	DATE: AUG. 2004	DWG. NO. W-14

MINIMUM FOOTAGE OF RESTRAINED PIPE FOR VARIOUS DIAMETERS & DEGREES DUCTILE IRON ELBOWS

COVER / DIA. MAIN	DEGREE OF ELBOW											
	11¼°			22½°			45°			90° OR DEAD END		
	4'	5'	8'	4'	5'	8'	4'	5'	8'	4'	5'	8'
4"	–	–	–	–	–	–	3	3	2	10	8	5
6"	–	–	–	2	–	–	5	4	2	14	12	7
8"	–	–	–	2	2	–	6	5	3	20	16	10
10"	–	–	–	3	2	1	8	7	4	28	22	14
12"	–	–	–	3	3	2	12	9	6	39	30	19
16"	2	1	–	5	4	3	17	14	9	58	47	30
20"	2	2	–	6	5	3	22	18	12	75	62	40
24"	2	2	–	7	6	4	26	22	14	88	73	47
30"	3	2	–	9	7	5	29	26	18	104	86	57
36"	3	3	–	11	9	6	39	34	21	128	111	70
42"	3	3	–	12	10	7	42	35	24	139	116	78
48"	4	3	–	13	11	7	47	39	26	155	129	86
54"			–			8			30			98

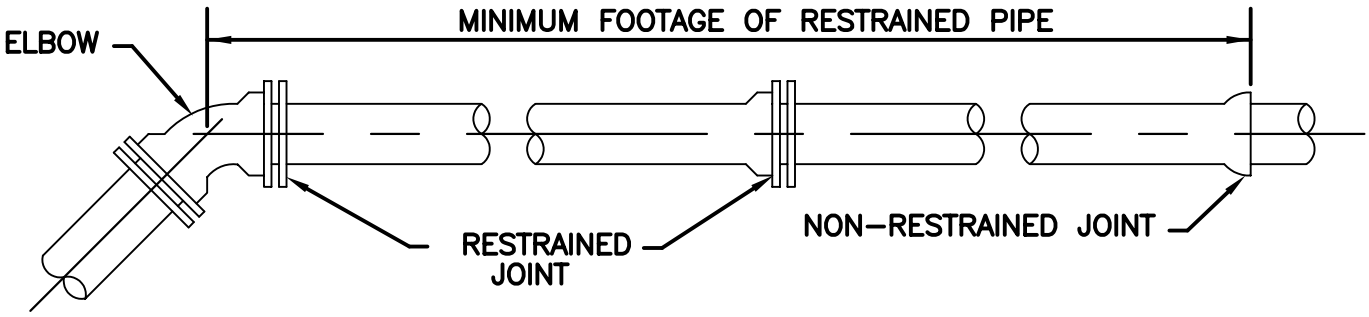

BATESVILLE WATER UTILITY

WATER MAIN CONSTRUCTION DETAILS

LENGTH AND METHOD OF RESTRAINT

SCALE: NONE	DATE: AUG. 2004	DWG. NO. W-15

METHODS OF RESTRAINING

1. RESTRAINED JOINTS ON STANDARD M.J. PIPE

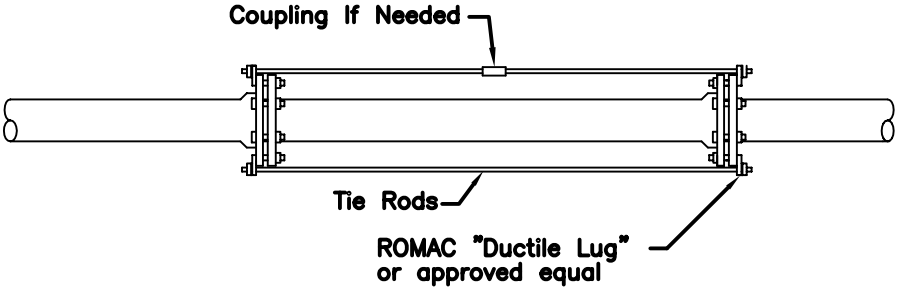

2. RESTRAINED JOINTS ON M.J. PIPE USING SET SCREW RETAINER GLANDS

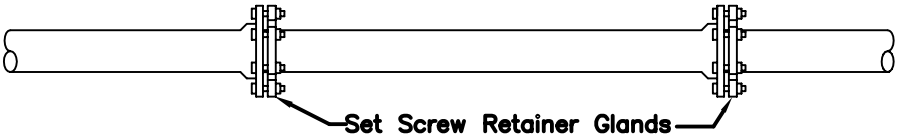

3. RESTRAINED JOINTS ON SLIP JOINT PIPE

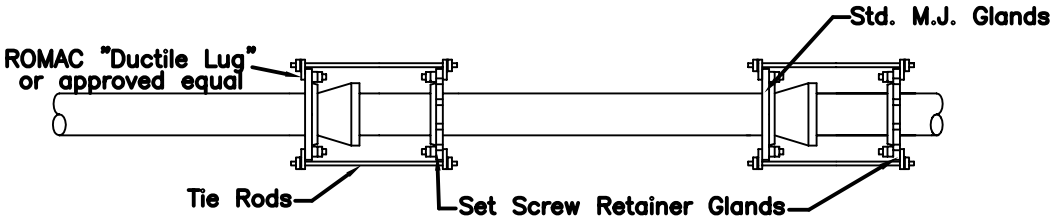

4. SELF ANCHORING NIPPLE OR PLAIN END PIPE w/2–M.J. SET SCREW RETAINER GLANDS

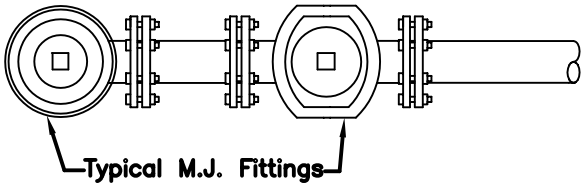

5. RESTRAINED PUSH ON JOINTS (FIELD–LOK OR EQUAL)

BATESVILLE WATER UTILITY

WATER MAIN CONSTRUCTION DETAILS		
METHODS OF RESTRAINING		
SCALE: NONE	DATE: AUG. 2004	DWG. NO. W-16

FOR ANGLES OTHER THAN THOSE SHOWN BELOW, CONSULT PROJECT ENGINEER FOR NUMBER AND SIZE OF RESTRAINING RODS.

Dia.	11 1/4°	22 1/2°	45°	90° or DEAD END MAIN
4"	None Req'd.	None Req'd.	2–1/2"	2–1/2"
6"	None Req'd.	2–1/2"	2–1/2"	2–1/2"
8"	None Req'd.	2–1/2"	2–1/2"	4–1/2";4–5/8";2–3/4"
10"	None Req'd.	2–1/2"	2–1/2"	6–1/2";4–5/8";4–3/4"
12"	None Req'd.	2–1/2"	4–1/2" or 2–5/8"	8–1/2";6–5/8";4–3/4"
16"	2–1/2"	2–1/2"	4–1/2";4–5/8";2–3/4"	8–5/8" or 6–3/4"
20"	2–1/2"	2–1/2"	6–1/2";4–5/8";4–3/4"	12–5/8" or 8–3/4"
24"	2–1/2"	4–1/2" or 2–5/8"	8–1/2";6–5/8";4–3/4"	12–3/4"

ABOVE FIGURES BASED ON DESIGN CRITERIA AS FOLLOWS:

Internal Pressure = 200 psig (Incl. Water Hammer)

Safety Factor = 2.5 Min.

Ultimate Strength For Tie Rod Mat'l. = 75,000 psi

Thread Sizes = American Coarse, Loose Fit

BATESVILLE WATER UTILITY

WATER MAIN CONSTRUCTION DETAILS

NUM. & DIA. OF RESTRAINING RODS TO USE FOR VARIOUS DEGREES OF ELBOWS & SIZES OF PIPES

SCALE: NONE	DATE: AUG. 2004	DWG. NO. W-17

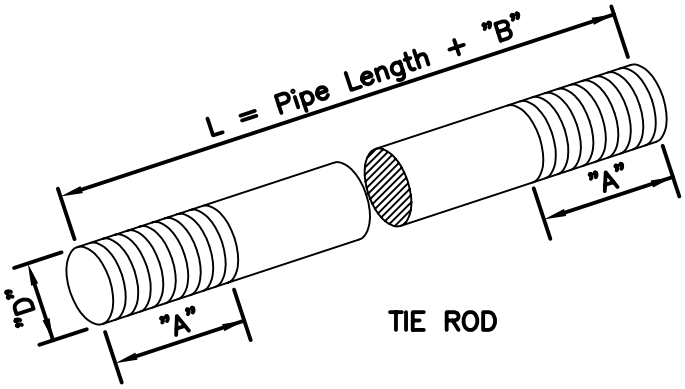

TIE ROD

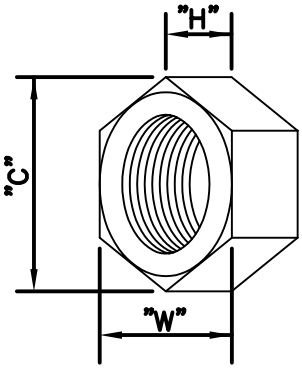

ANSI HEAVY NUT
(Semi–finished)

All Tie Rods, Nuts, Washers shall be made of Cor–Ten, or equal, Corrosion Resistant Steel; or they shall be made of Cold Rolled Steel with a Minimum Tensile Stregth of 75,000 P.S.I. and shall have a Minimum Thickness of Cadmium Plating of 6.0 Mils placed after threads are cut, and shall be coated with Yellow Chromate.

Tie Rods shall have a Minimum Thread Length of "A". However, they may be Threaded their full length.

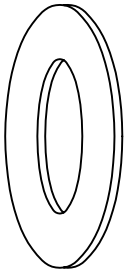

HEAVY WASHER
(ANSI B27.2)

3/4" Rods, Nuts, and Washers shall be used in all Cases, Unless this size is not available and Written Approval is obtained from the Engineer.

TIE ROD DATA		
PIPE DIA.	"A" (Min.)	"B" (Min.)
4"	6 1/4"	1 1/2"
6"	6 1/2"	1 1/2"
8"	6 1/2"	1 3/4"
10"	6 3/4"	1 3/4"
12"	6 3/4"	2"
16"	7 1/4"	1/4"
20"	7 1/2"	1/2"
24"	7 3/4"	3/4"
30"	8 1/4"	0
36"	8 1/2"	1/2"

NUT AND WASHER DATA							
"D"	NUTS				NUTS		
	No. Thds	"C"	"W"	"H"	I.D.	O.D.	"T"
3/4"	10	1 7/16"	1 1/4"	3/4"	13/16"	2"	5/32"
5/8"	11	1 1/4"	1 1/16"	5/8"	11/16"	1 3/4"	1/8"
1/2"	13	1"	7/8"	1/2"	9/16"	1 3/8"	3/32"

BATESVILLE WATER UTILITY

WATER MAIN CONSTRUCTION DETAILS

TIE RODS, NUTS, & WASHERS

SCALE: NONE	DATE: AUG. 2004	DWG. NO. W-18

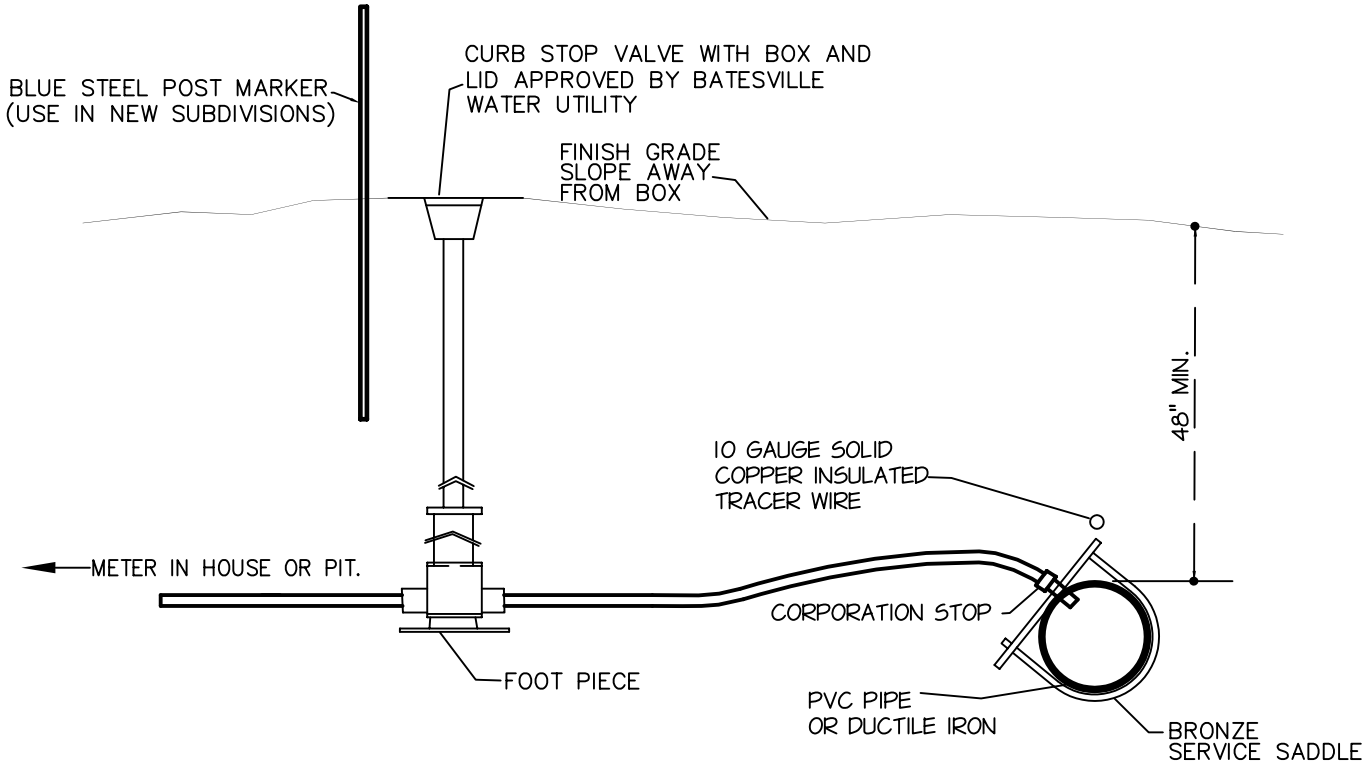

BATESVILLE WATER UTILITY

WATER SERVICE DETAILS

TYPICAL CURB VALVE INSTALLATION DETAIL

SCALE: NONE	DATE: AUG. 2004	DWG. NO. W-19

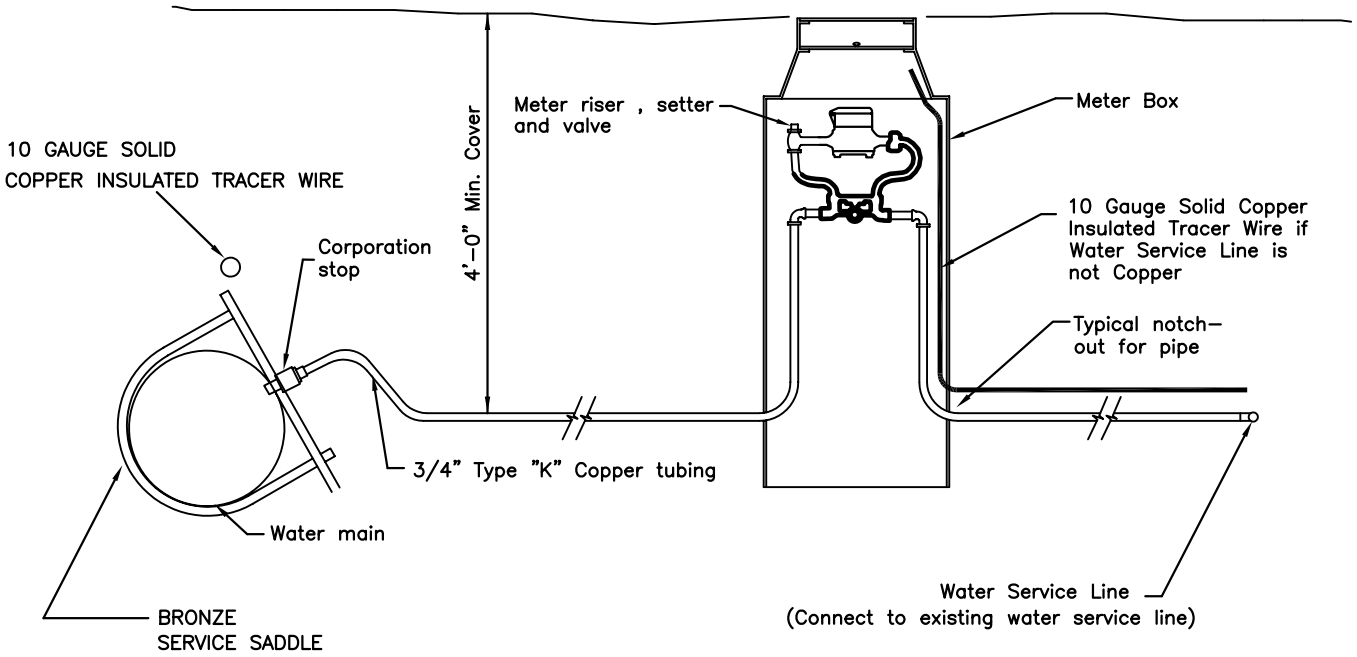

BATESVILLE WATER UTILITY

WATER SERVICE DETAILS

WATER SERVICE CONNECTION

SCALE: NONE	DATE: AUG. 2004	DWG. NO. W-20

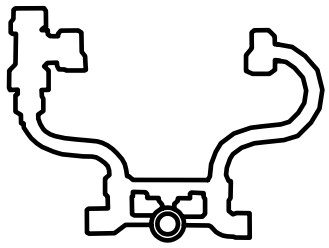

TYPICAL COPPER METER SETTER

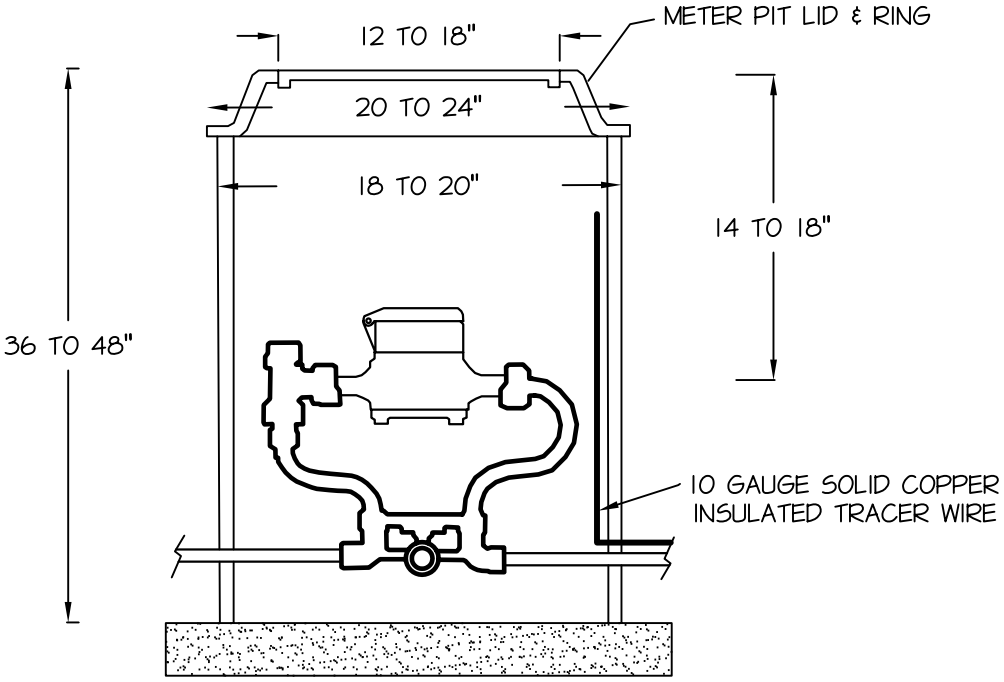

BATESVILLE WATER UTILITY

WATER SERVICE DETAILS

TYPICAL RESIDENTIAL METER PIT INSTALLATION

SCALE: NONE	DATE: AUG. 2004	DWG. NO. W-21

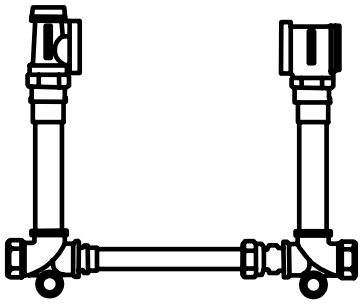

TYPICAL COPPER METER YOKE W/ DUAL CHECK
MUELLER MODEL B-2428-2

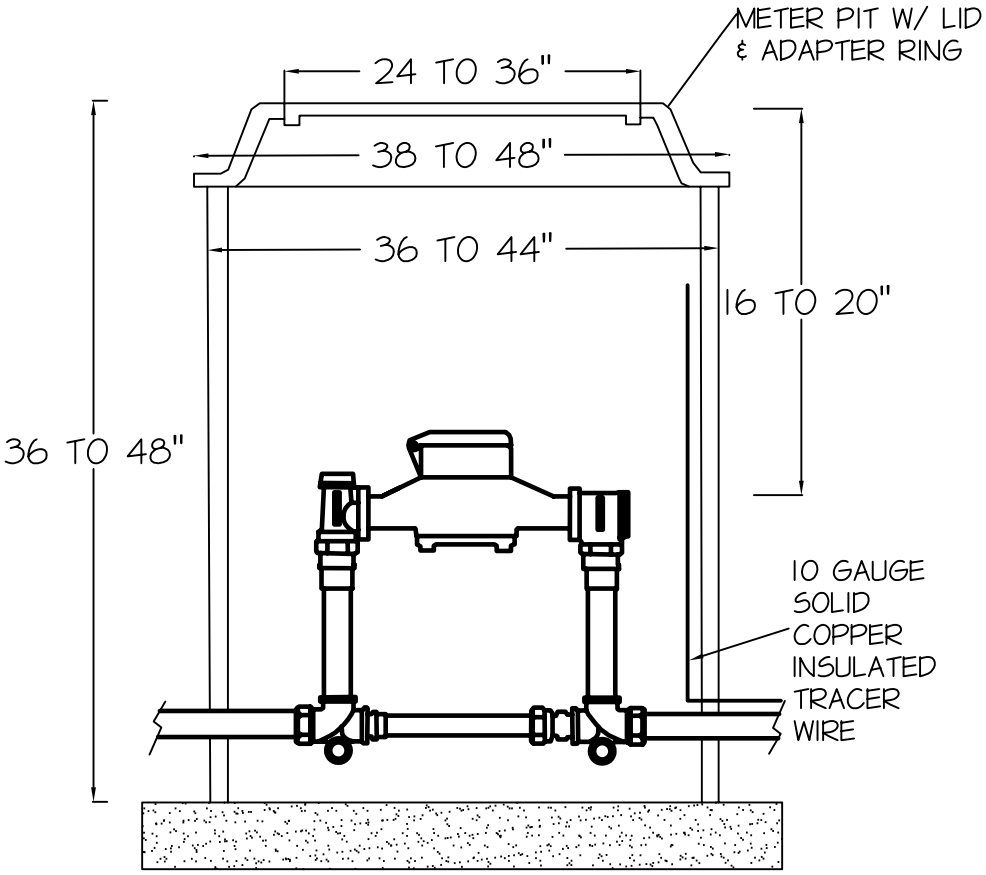

TYPICAL METER PIT INSTALLATION

BATESVILLE WATER UTILITY

WATER SERVICE DETAILS		
COMMERCIAL/INDUSTRIAL METER PIT INSTALLATION		
SCALE: NONE	DATE: AUG. 2004	DWG. NO. W-22

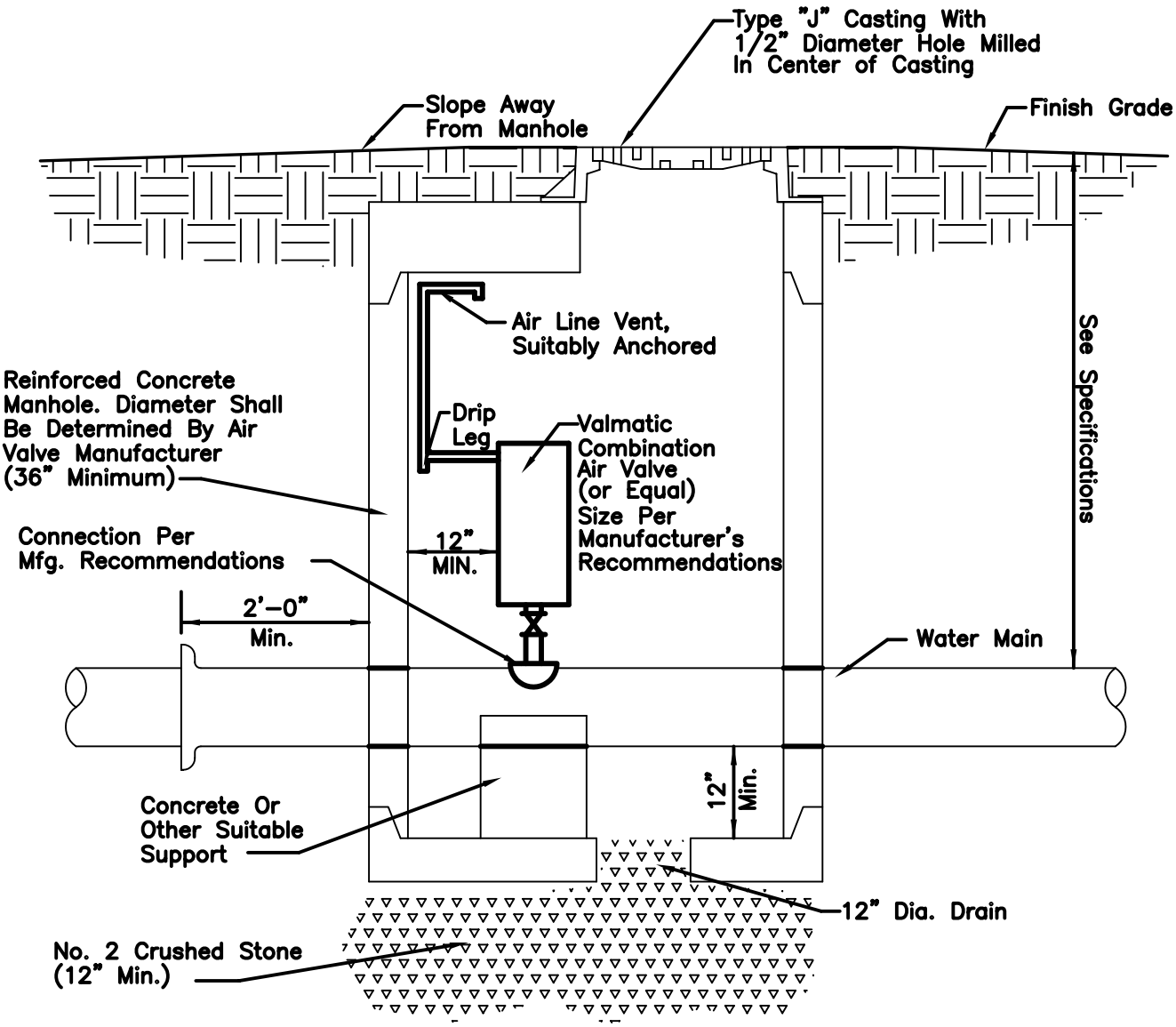

NOTE:

All Air Valve Structures Shall Be Field Located On Each High Point Elevation On The Water Main Or As Located On The Drawings. The Location Of Each Structure Where Shown On The Drawings Is Approximate.

BATESVILLE WATER UTILITY

WATER MAIN CONSTRUCTION DETAILS		
WATERMAIN AIR VALVE STRUCTURE		
SCALE: NONE	DATE: AUG. 2004	DWG. NO. W-23

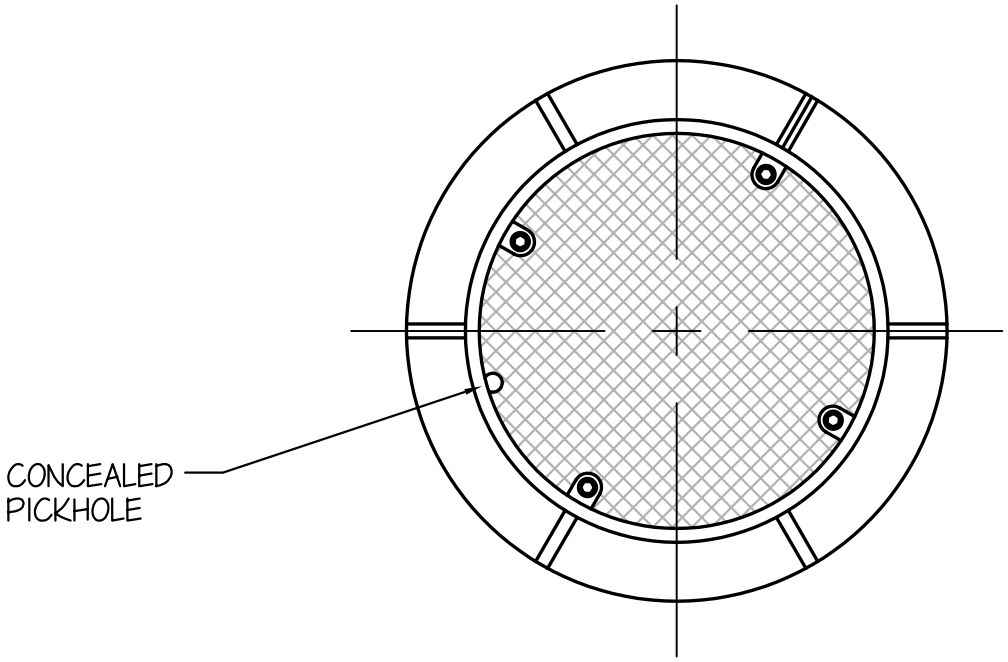

TYPE J CASTING
NEENAH R-1916-F OR
EAST JORDAN 1045 WT

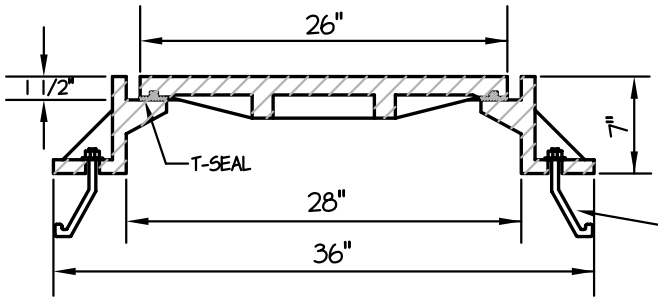

ANCHOR BOLT
(FASTENED TO M.H.)

BATESVILLE WATER UTILITY

WATER MAIN CONSTRUCTION DETAILS

TYPE J WATERPROOF MANHOLE FRAME W/BOLTED LID

SCALE: NONE	DATE: AUG. 2004	DWG. NO. W-24

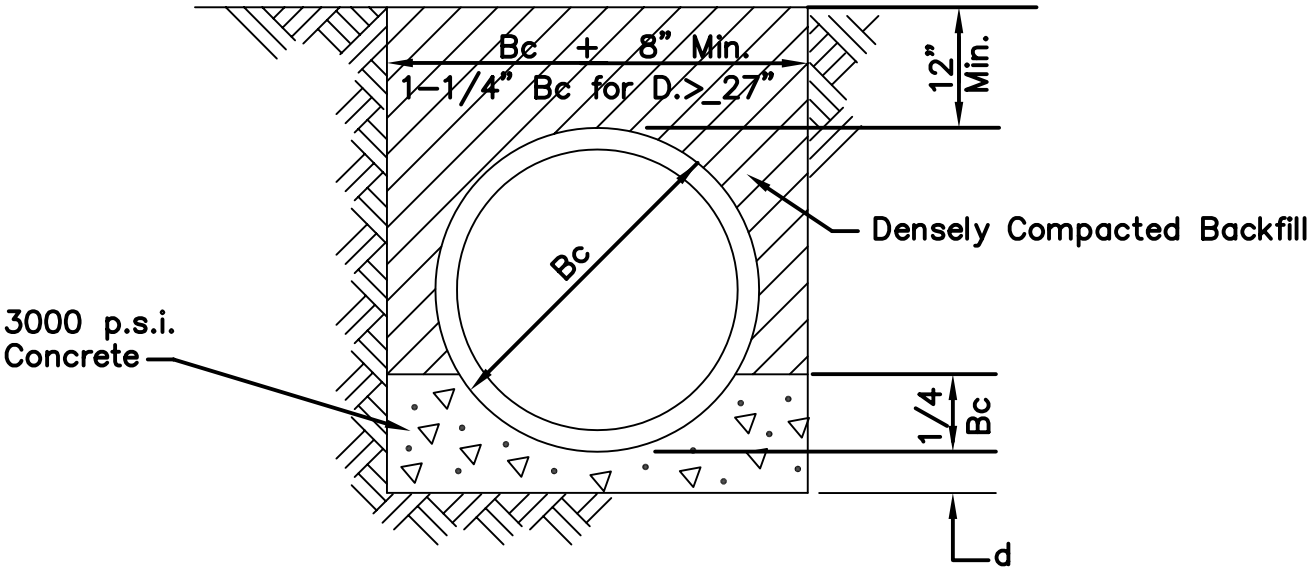

CONCRETE CRADLE

Depth of Bedding Material Below Pipe	
D	d(Min.)
27" & Smaller	3"
30" to 60"	4"
66" & Larger	6"

LEGEND

Bc = Outside Diameter

D = Inside Diameter

d = Depth of Concrete Cradle below Pipe Bell

NOTE:

For Rock or Other Non-Compressable Material:
The Trench should be over-excavated a min. of 6" & refilled with Granular Material.

BATESVILLE WATER UTILITY

WATER MAIN CONSTRUCTION DETAILS

RIGID PIPE BEDDING DETAIL "CLASS A"

SCALE: NONE	DATE: AUG. 2004	DWG. NO. W-25

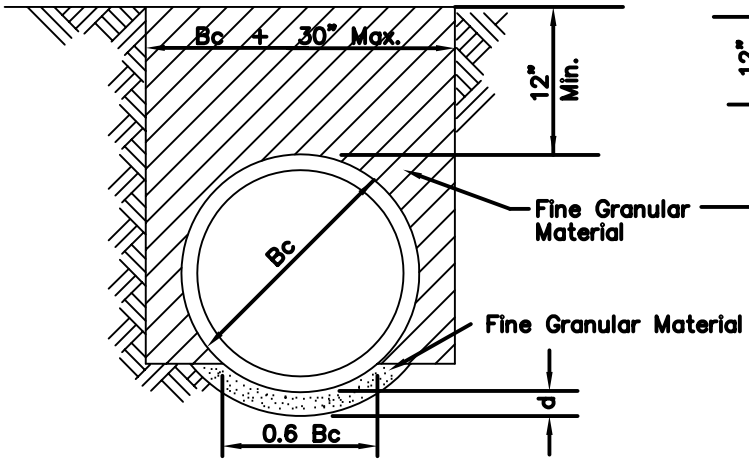

SHAPED SUBGRADE WITH GRANULAR FOUNDATION

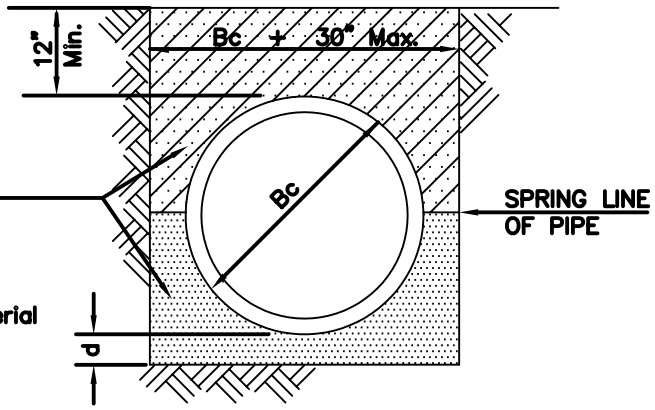

GRANULAR FOUNDATION

Depth of Bedding Material Below Pipe	
D	d(Min.)
27" & Smaller	3"
30" to 60"	4"
66" & Larger	6"

LEGEND

Bc = Outside Diameter

D = Inside Diameter

d = Depth of Bedding Material below Pipe Bell

NOTE:

For Rock or Other Non-Compressable Material: The Trench should be over-excavated a min. of 6" & refilled with Granular Material.

BATESVILLE WATER UTILITY

WATER MAIN CONSTRUCTION DETAILS

RIGID PIPE BEDDING DETAIL "CLASS B"

SCALE: NONE	DATE: AUG. 2004	DWG. NO. W-26

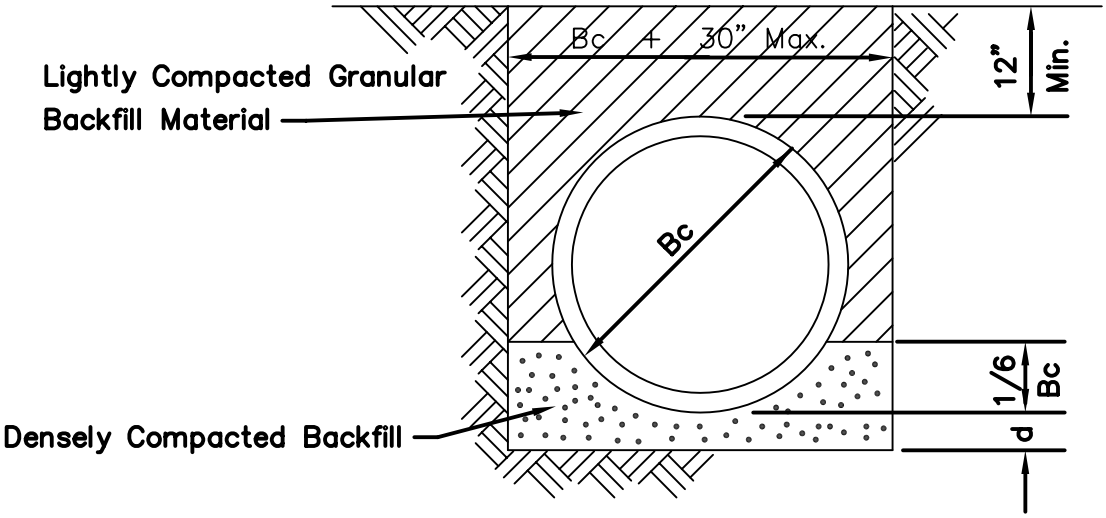

GRANULAR FOUNDATION

Depth of Bedding Material Below Pipe	
D	d(Min.)
27" & Smaller	3"
30" to 60"	4"
66" & Larger	6"

LEGEND

Bc = Outside Diameter

D = Inside Diameter

d = Depth of Bedding Material below Pipe Bell

NOTE:

For Rock or Other Non–Compressable Material:
The Trench should be over–excavated a min. of 6" & refilled with Granular Material.

BATESVILLE WATER UTILITY

WATER MAIN CONSTRUCTION DETAILS

RIGID PIPE BEDDING DETAIL "CLASS C"

SCALE: NONE	DATE: AUG. 2004	DWG. NO. W-27

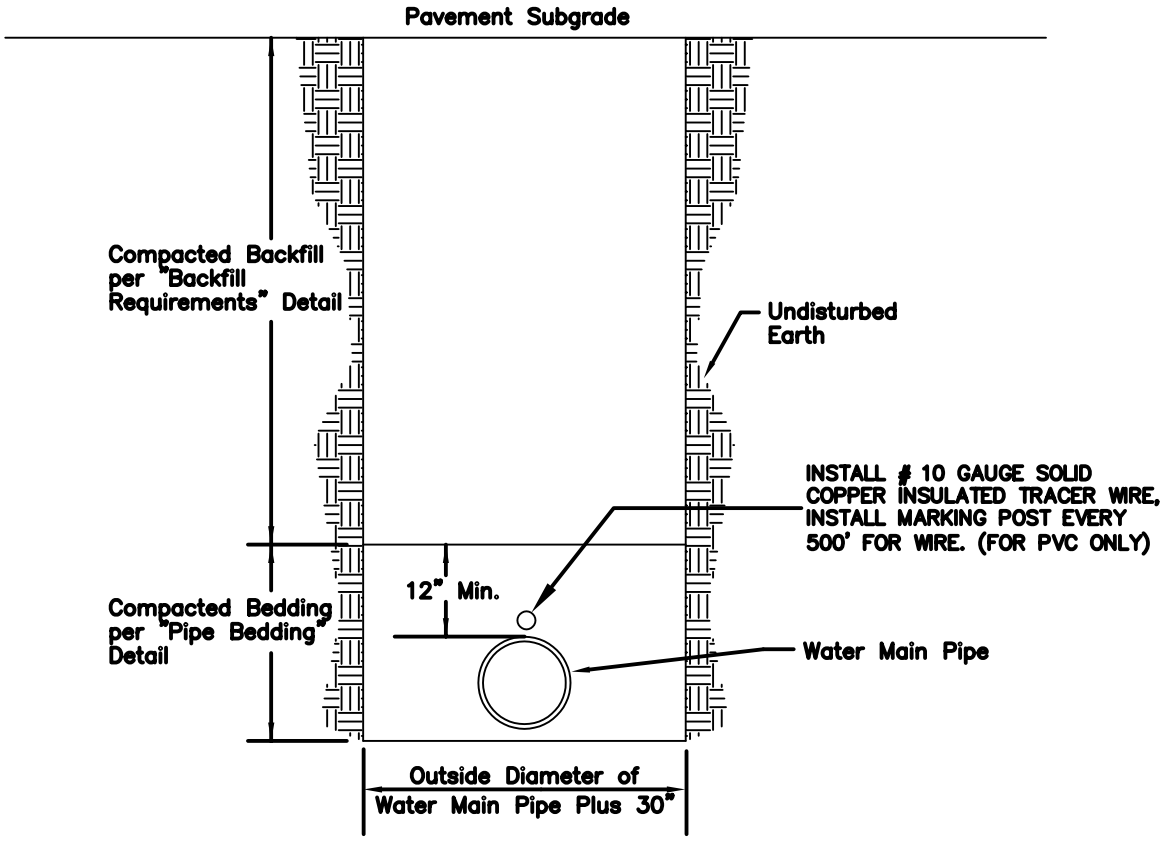

BATESVILLE WATER UTILITY

WATER MAIN CONSTRUCTION DETAILS

WATER MAIN TRENCH DETAIL

SCALE: NONE	DATE: AUG. 2004	DWG. NO. W-28

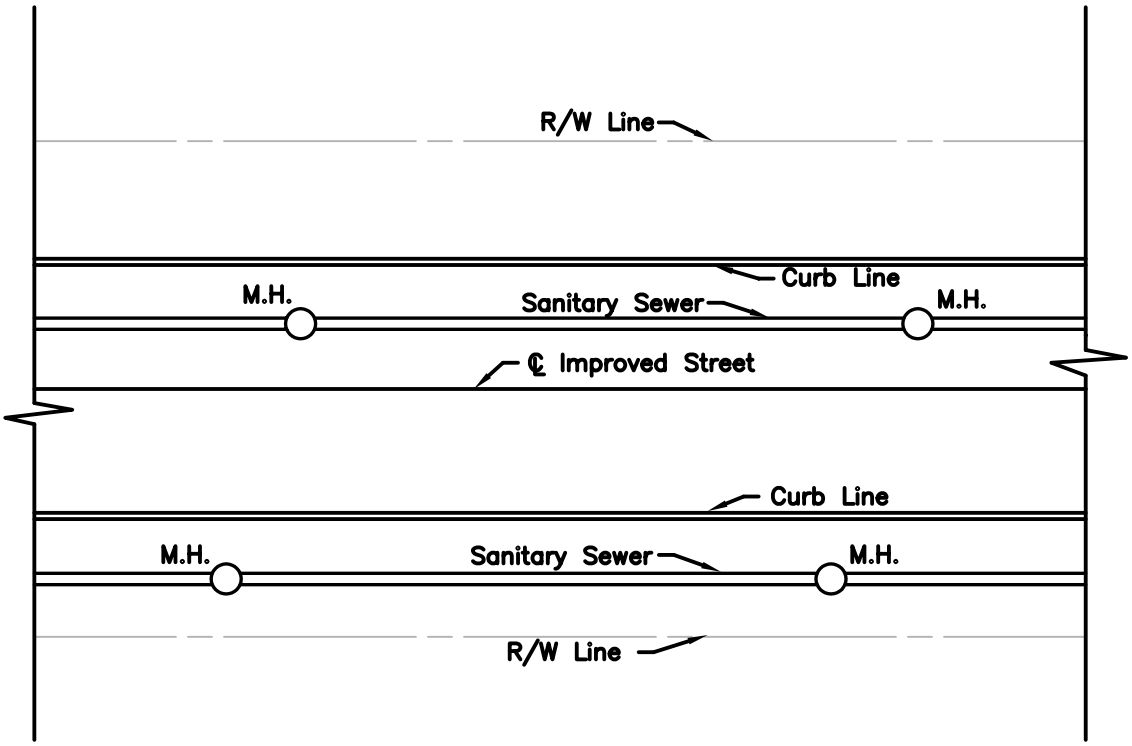

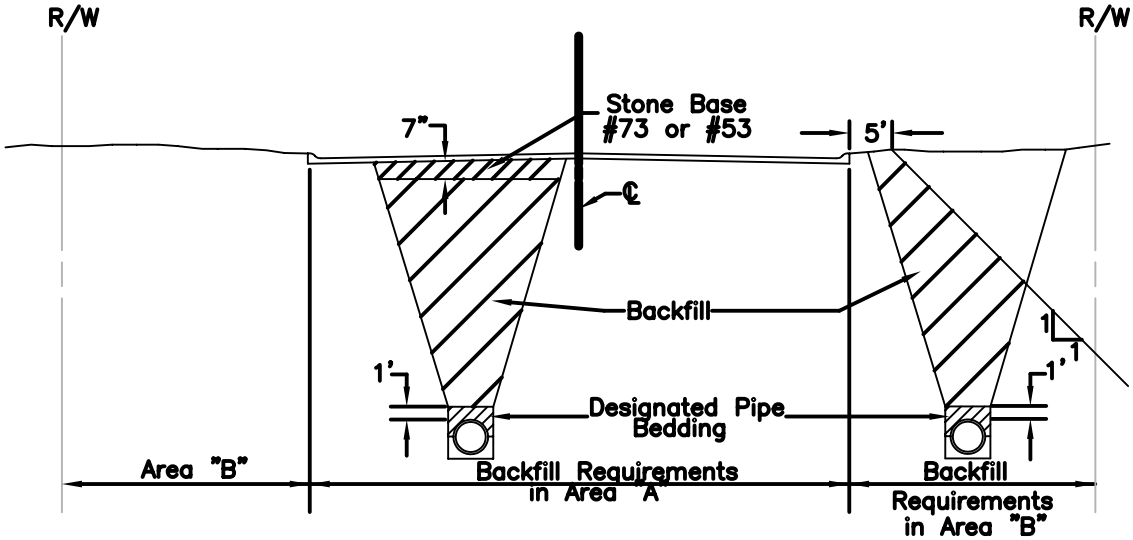

(FOR PIPE LINES WITHIN RIGHT OF WAY FOR IMPROVED STREETS)

BATESVILLE WATER UTILITY

WATER MAIN CONSTRUCTION DETAILS		
BACKFILL REQUIREMENTS (WITHIN R/W FOR IMPROVED STREETS)		
SCALE: NONE	DATE: AUG. 2004	DWG. NO. W-29

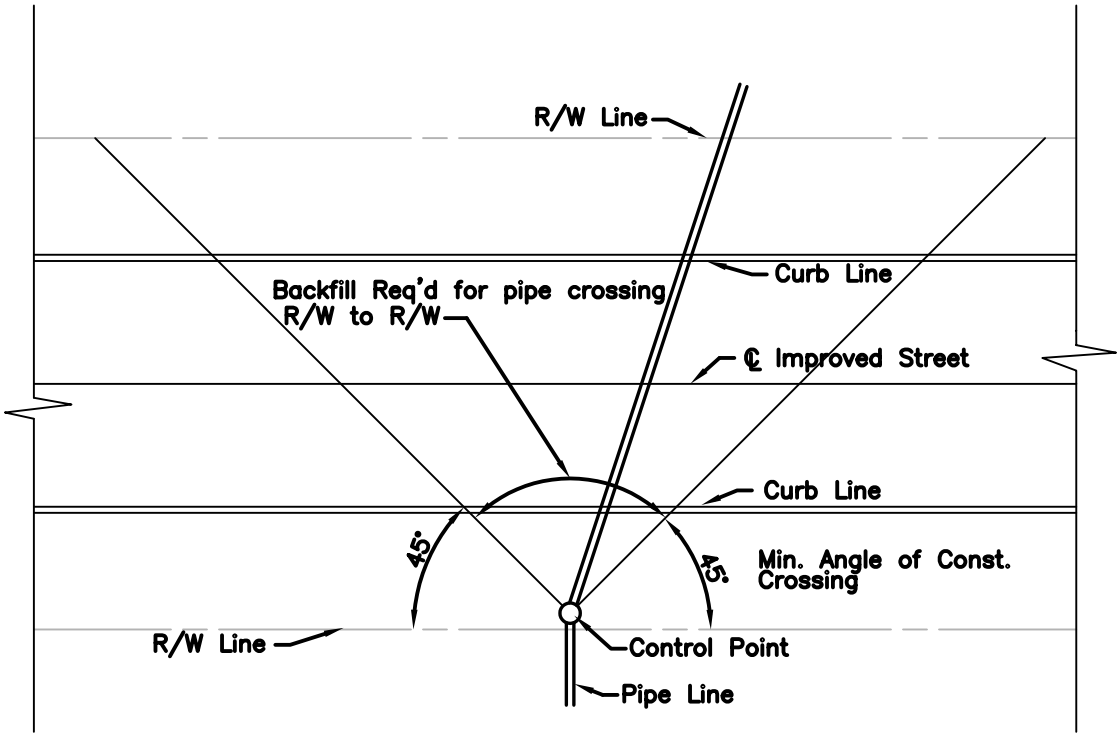

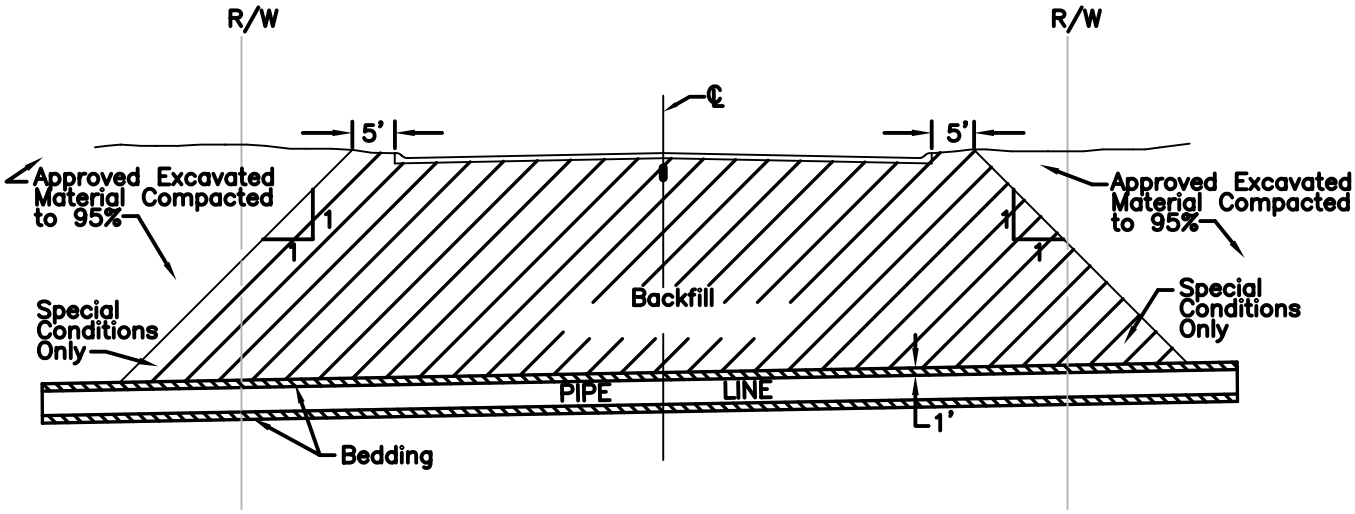

(FOR PIPE LINES CROSSING RIGHT OF WAY FOR IMPROVED STREETS)

BATESVILLE WATER UTILITY

WATER MAIN CONSTRUCTION DETAILS

BACKFILL REQUIREMENTS
(FOR CROSSING R/W FOR IMPROVED STREETS)

SCALE: NONE	DATE: AUG. 2004	DWG. NO. W-30