DOWEL BAR SIZES	
Pavement Thickness, D	Minimum Dowel Bar Diameter
Less than 9"	1"
9" thruogh 12"	$1\frac{1}{4}$"
Greater than 12"	$1\frac{1}{2}$"

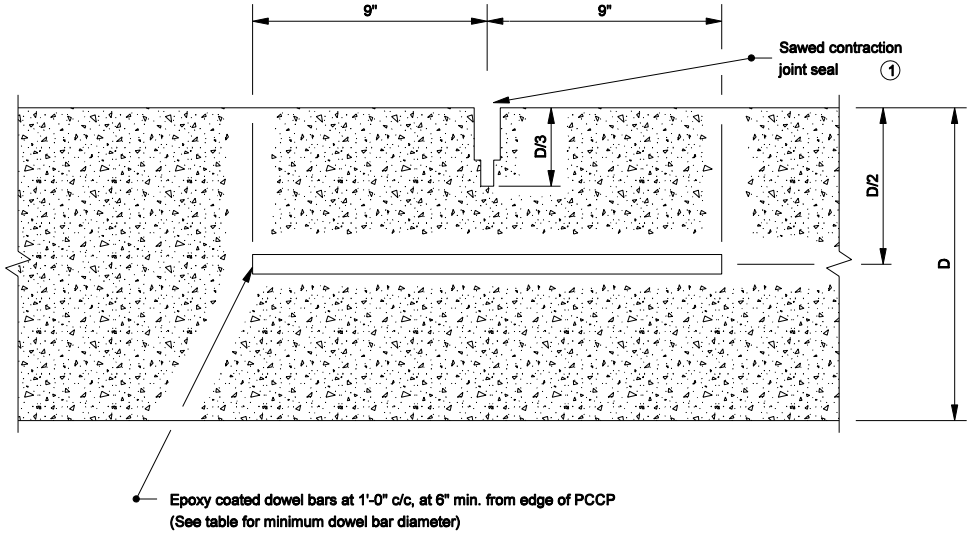

LONGITUDINAL SECTION THROUGH PCCP

NOTES:

① For Type D-1 contraction joint sealant options, see Standard Drawing E 503-CCPJ-06.

INDIANA DEPARTMENT OF TRANSPORTATION

TYPE D-1
CONTRACTION JOINT

MARCH 2005

STANDARD DRAWING NO. E 503-CCPJ-01

RICHARD L. VanCLEAVE REGISTERED No. 9750 STATE OF INDIANA PROFESSIONAL ENGINEER

DESIGN STANDARDS ENGINEER

/s/ Richard L. VanCleave 3-01-05
DESIGN STANDARDS ENGINEER DATE

/s/ Richard K. Smutzer 3-01-05
CHIEF HIGHWAY ENGINEER DATE

TIE-BAR SIZES FOR LONGITUDINAL JOINT	
Pavement Thickness, D	**Tie Bar Size**
Less than 9"	#5
9" through 12"	#6
Greater than 12"	#7

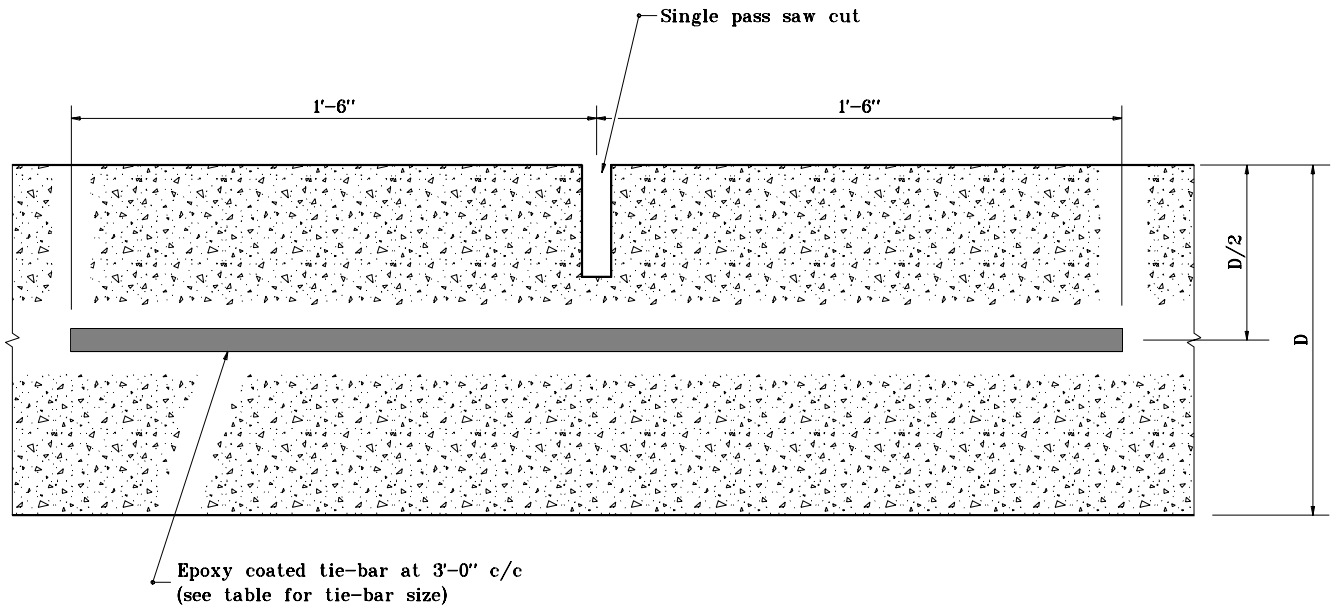

TRANSVERSE SECTION THROUGH CONCRETE PCCP

INDIANA DEPARTMENT OF TRANSPORTATION

LONGITUDINAL JOINT

SEPTEMBER 1999

STANDARD DRAWING NO. **E 503-CCPJ-02**

ANTHONY L. UREMOVICH REGISTERED No. 18095 STATE OF INDIANA PROFESSIONAL ENGINEER

DESIGN STANDARDS ENGINEER

/s/ Anthony L. Uremovich 9-01-99
DESIGN STANDARDS ENGINEER DATE

/s/ Donald W. Lucas 9-01-99
CHIEF HIGHWAY ENGINEER DATE

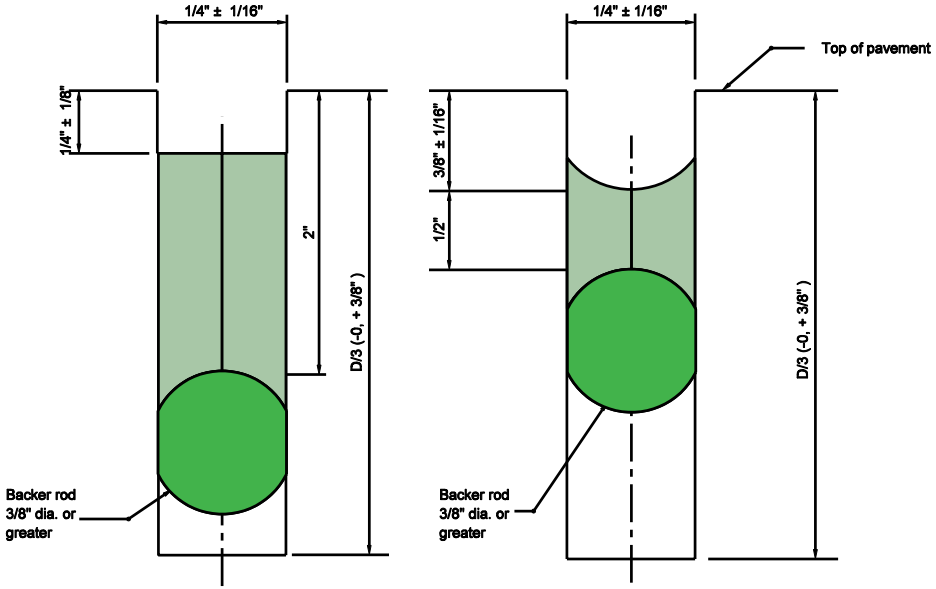

HOT POURED JOINT SEALANT

SILICONE JOINT SEALANT

SAWED LONGITUDINAL JOINT SEALANT OPTIONS

INDIANA DEPARTMENT OF TRANSPORTATION

LONGITUDINAL JOINT

MARCH 2004

STANDARD DRAWING NO. E 503-CCPJ-03

RICHARD L. VANCLEAVE REGISTERED No. 9750 STATE OF INDIANA PROFESSIONAL ENGINEER

DESIGN STANDARDS ENGINEER

/s/ Richard L. VanCleave 3-01-04
DESIGN STANDARDS ENGINEER DATE

/s/ Richard K. Smutzer 3-01-04
CHIEF HIGHWAY ENGINEER DATE

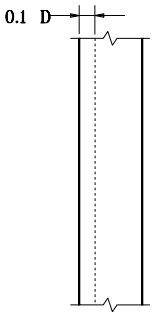

PLAN

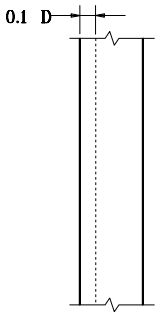

PLAN

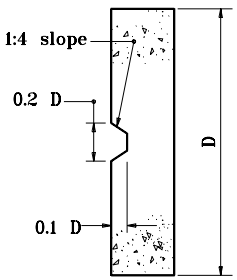

ELEVATION

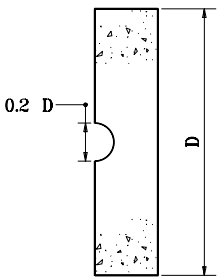

ELEVATION

NOTES

1. See Standard Drawings E 503-CCPJ-01, -02, and -03 for sawed construction joint sealant options.

INDIANA DEPARTMENT OF TRANSPORTATION

LONGITUDINAL KEYWAY JOINT

SEPTEMBER 1999

STANDARD DRAWING NO. **E 503-CCPJ-04**

ANTHONY L. UREMOVICH REGISTERED No. 18095 STATE OF INDIANA PROFESSIONAL ENGINEER

DESIGN STANDARDS ENGINEER

/s/ Anthony L. Uremovich 9-01-99
DESIGN STANDARDS ENGINEER DATE

/s/ Donald W. Lucas 9-01-99
CHIEF HIGHWAY ENGINEER DATE

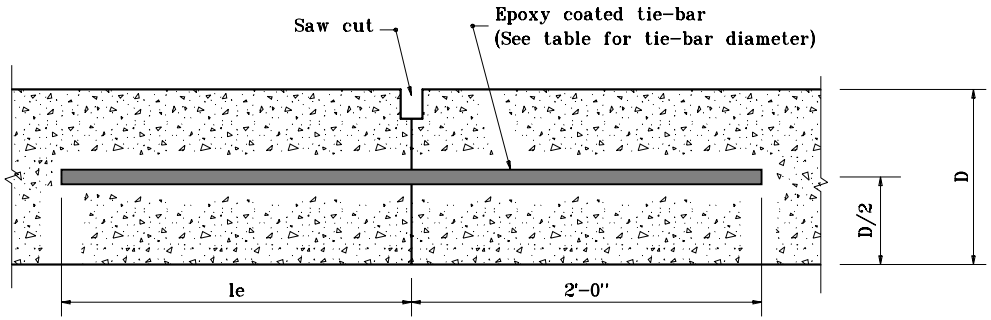

SECTION A-A

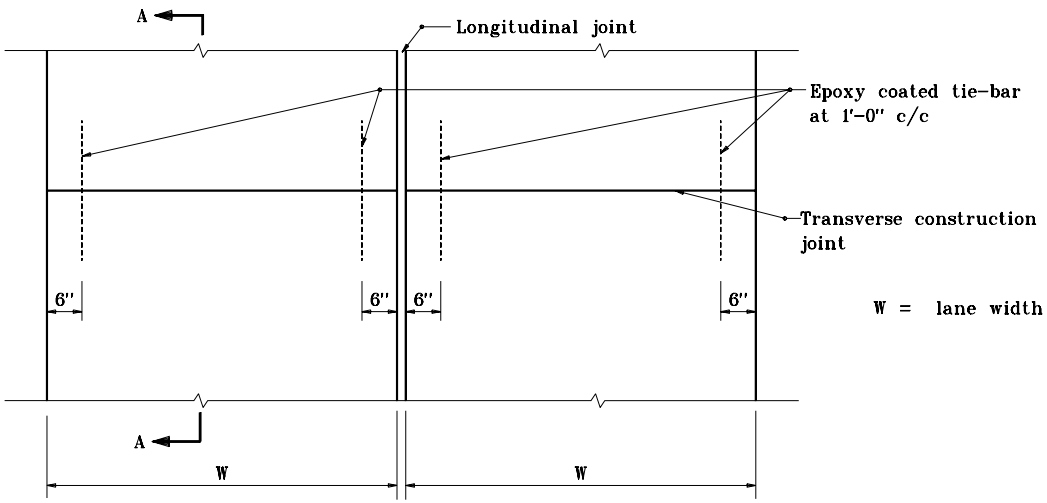

W = lane width

PLAN

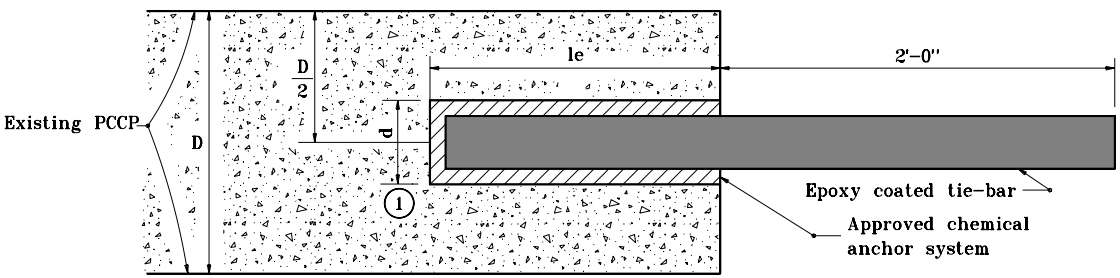

RETROFIT CONSTRUCTION TIE-BAR EMBEDMENT DETAIL

NOTES

1. Diameter of drilled hole d shall be in accordance with the chemical anchor system manufacturer's instructions.

TIE-BAR SIZES FOR TRANSVERSE CONSTRUCTION JOINT

Pavement Thickness, D	Tie Bar Size	Min. le
Less than 9"	#5	1'-0"
9" through 12"	#8	1'-8"
Greater than 12"	#10	2'-0"

INDIANA DEPARTMENT OF TRANSPORTATION

TRANSVERSE CONSTRUCTION JOINT

SEPTEMBER 1999

STANDARD DRAWING NO. E 503-CCPJ-05

ANTHONY L. UREMOVICH REGISTERED No. 18095 STATE OF INDIANA PROFESSIONAL ENGINEER

DESIGN STANDARDS ENGINEER

/s/ Anthony L. Uremovich 9-01-99
DESIGN STANDARDS ENGINEER DATE

/s/ Donald W. Lucas 9-01-99
CHIEF HIGHWAY ENGINEER DATE

NOTES

1. Transverse joints shall be constructed perpendicular to the centerline with a maximum spacing of 18'-0" unless otherwise specified.
2. The configuration of the preformed elastomeric joint seal shall be a 9/16" to 5/8" wide seal with at least a five cell internal design. The seal height shall be 9/16" to 13/16" in uncompressed stage.
3. For transverse construction joints, the initial saw cut may be eliminated.

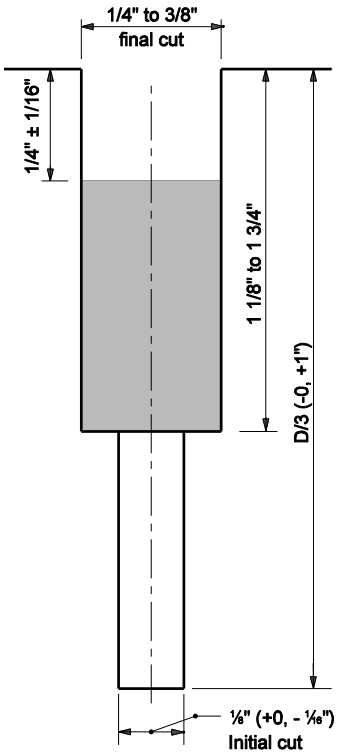

PREFORMED ELASTOMERIC SEAL

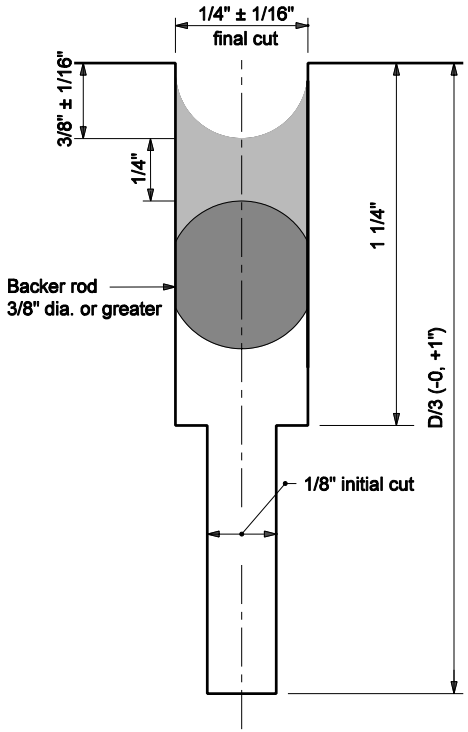

SILICONE JOINT SEALANT

TYPE D-1 SAWED CONTRACTION JOINT SEALANT OPTIONS

INDIANA DEPARTMENT OF TRANSPORTATION

TRANSVERSE JOINT SEALS

MARCH 2005

STANDARD DRAWING NO. E 503-CCPJ-06

RICHARD L. VanCLEAVE REGISTERED No. 9750 STATE OF INDIANA PROFESSIONAL ENGINEER

DESIGN STANDARDS ENGINEER

/s/ Richard L. VanCleave 3-01-05
DESIGN STANDARDS ENGINEER DATE

/s/ Richard K. Smutzer 3-01-05
CHIEF HIGHWAY ENGINEER DATE

TIE-BAR SIZES FOR LONGITUDINAL CONSTRUCTION JOINT		
Pavement Thickness, D	**Tie-Bar Size**	**Spacing**
Less than 9"	#5	3'-0" c/c
9" through 12"	#6	3'-0" c/c
Greater than 12"	#6 or #7	2'-0" c/c 3'-0" c/c

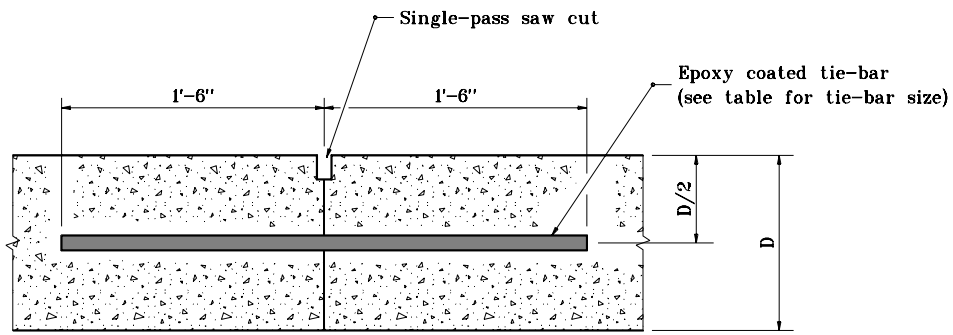

SECTION A-A

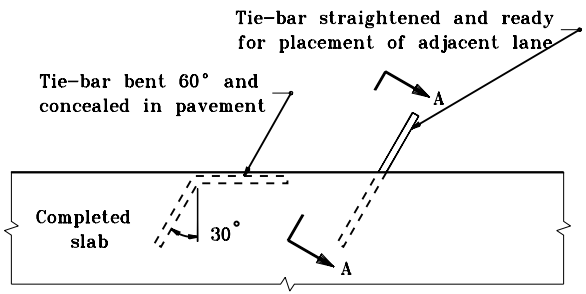

PLAN VIEW

METHOD OF PLACING TIE-BAR FOR LONGITUDINAL CONSTRUCTION JOINT

INDIANA DEPARTMENT OF TRANSPORTATION

LONGITUDINAL CONSTRUCTION JOINT

SEPTEMBER 1999

STANDARD DRAWING NO. **E 503-CCPJ-07**

ANTHONY L. UREMOVICH REGISTERED No. 18095 STATE OF INDIANA PROFESSIONAL ENGINEER

DESIGN STANDARDS ENGINEER

/s/ Anthony L. Uremovich 9-01-99
DESIGN STANDARDS ENGINEER DATE

/s/ Donald W. Lucas 9-01-99
CHIEF HIGHWAY ENGINEER DATE

NOTES

(1) Diameter of drilled hole (d) shall be in accordance with the chemical anchor system manufacturer's instructions.

PAVEMENT THICKNESS, D	LONGITUDINAL CONSTRUCTION JOINT Tie-bars at 900 c/c	
	TIE-BAR SIZE	MIN. LENGTH OF EMBEDMENT, le
Less than 9"	#5	1'-0"
9" to 12"	#7	1'-3"
Greater than 12"	#8	1'-6"

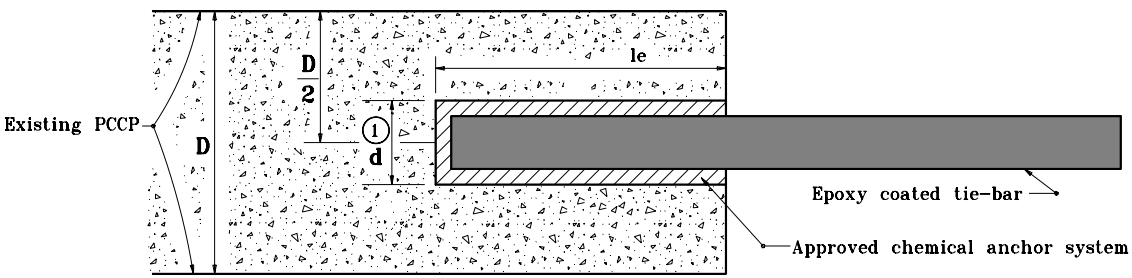

RETROFIT CONSTRUCTION TIE-BAR EMBEDMENT DETAIL

INDIANA DEPARTMENT OF TRANSPORTATION

LONGITUDINAL CONSTRUCTION JOINT

SEPTEMBER 1999

STANDARD DRAWING NO. **E 503-CCPJ-08**

ANTHONY L. UREMOVICH REGISTERED No. 18095 STATE OF INDIANA PROFESSIONAL ENGINEER

DESIGN STANDARDS ENGINEER

/s/ Anthony L. Uremovich 9-01-99
DESIGN STANDARDS ENGINEER DATE

/s/ Donald W. Lucas 9-01-99
CHIEF HIGHWAY ENGINEER DATE