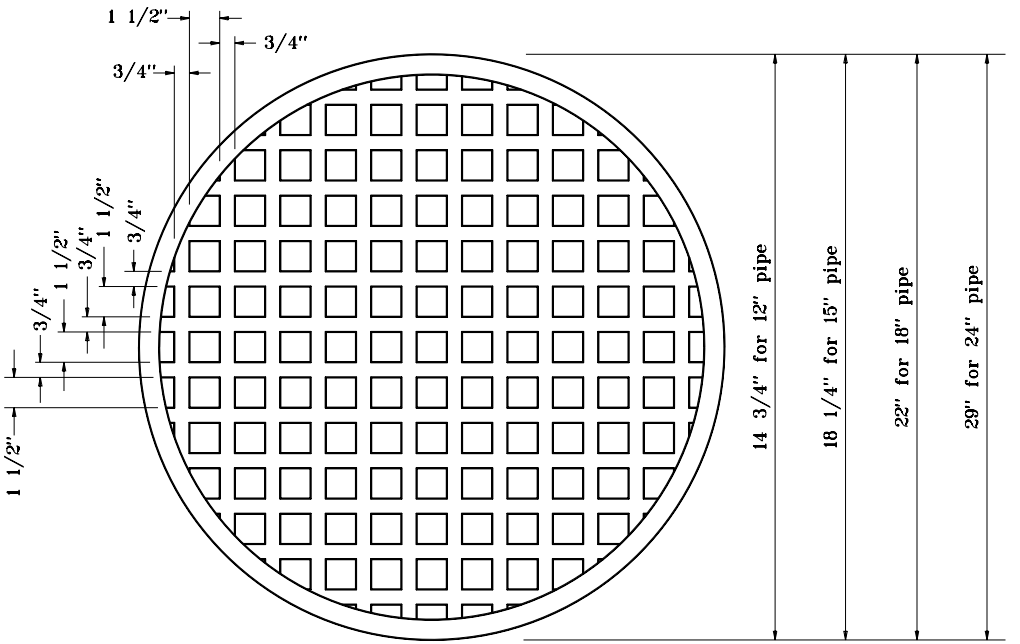

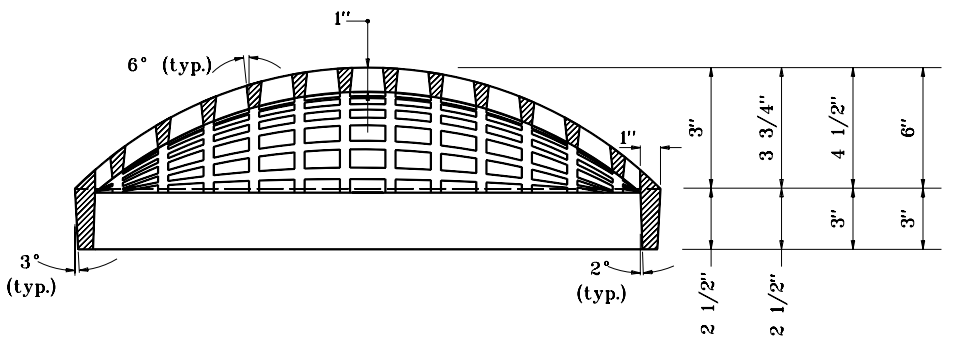

PIPE CATCH BASIN CASTING

INDIANA DEPARTMENT OF TRANSPORTATION

PIPE CATCH BASIN CASTING

APRIL 1995

STANDARD DRAWING NO. **E 720-CBCA-01**

ANTHONY L. UREMOVICH REGISTERED No. 18095 STATE OF INDIANA PROFESSIONAL ENGINEER

DESIGN STANDARDS ENGINEER

DETAILS PLACED IN THIS FORMAT	11-15-99
/s/ Anthony L. Uremovich DESIGN STANDARDS ENGINEER	11-15-99 DATE
/s/ Firooz Zandi CHIEF HIGHWAY ENGINEER	11-15-99 DATE
ORIGINALLY APPROVED	4-03-95

Str.	Type	Casting Types												
		2	3	4	5	6	7	8	10	12	12A	13	14	15
Catch Basins	A	X	X					X						
	D					X								
	E						X							
	J								X					
	K								X					
	S												X	
	W①	X	X					X						
Inlets	A	X	X					X						
	B													X
	C													X
	D					X								
	E						X							
	F						X							
	G						X							
	H, HA				X									
	J								X					
	M								X					
	N									X	X			
	P										X			
	R											X		
	S												X	
	T												X	
Manholes	A	X		X				X						
	B	X		X				X						
	C②	X		X				X						
	D	X		X				X						
	E	X		X				X						
	F	X		X				X						
	G	X		X				X						
	H	X		X				X						
	J	X		X				X						
	K	X		X				X						
	L	X		X				X						
	M	X		X				X						
	N	X		X				X						

NOTES

① May be substituted for catch basin type A.

② May be substituted for manhole type A or B.

INDIANA DEPARTMENT OF TRANSPORTATION

COMPATIBILITY OF DRAINAGE STRUCTURES AND CASTINGS

MARCH 2005

STANDARD DRAWING NO. E 720-CDSC-01

RICHARD L. VanCLEAVE REGISTERED No. 9750 STATE OF INDIANA PROFESSIONAL ENGINEER

DESIGN STANDARDS ENGINEER

/s/ Richard L. VanCleave 3-01-05
DESIGN STANDARDS ENGINEER DATE

/s/ Richard K. Smutzer 3-01-05
CHIEF HIGHWAY ENGINEER DATE

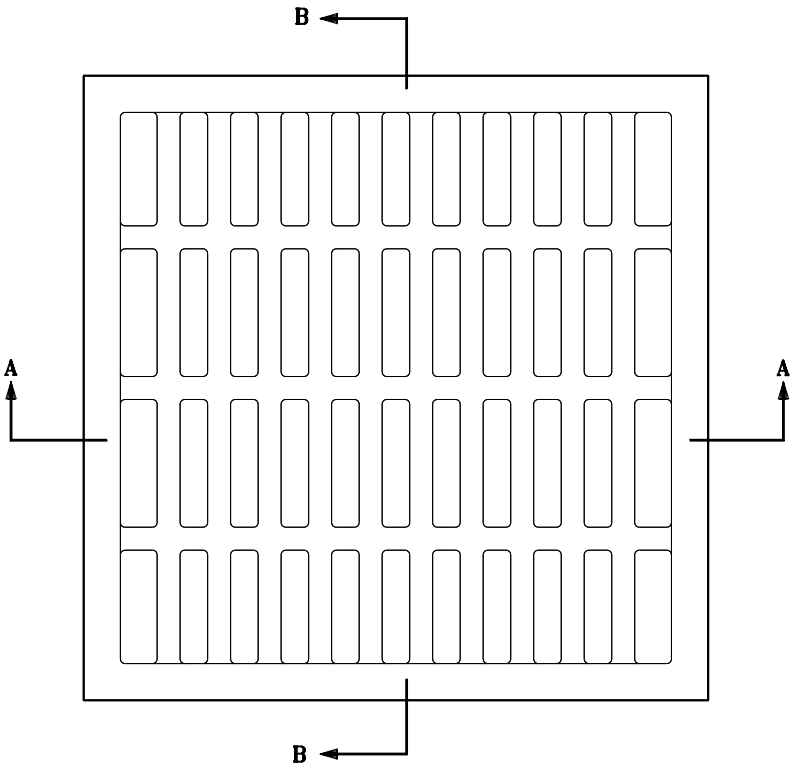

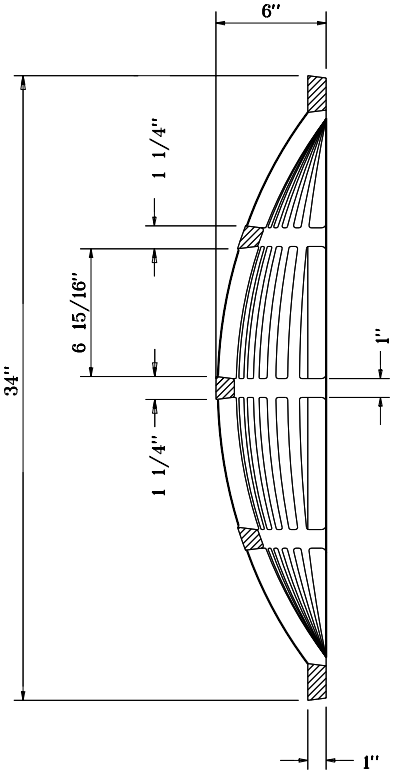

SECTION B–B

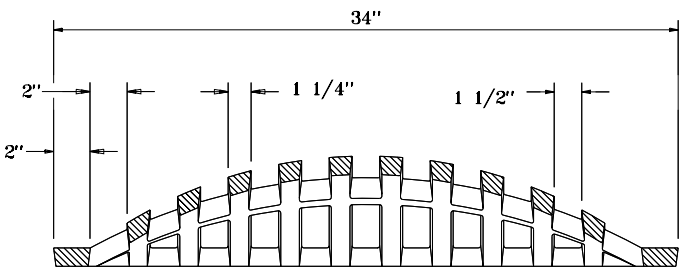

SECTION A–A

EARTH DITCH CASTING TYPE 7

INDIANA DEPARTMENT OF TRANSPORTATION

EARTH DITCH
CASTING TYPE 7
SEPTEMBER 1998

STANDARD DRAWING NO. **E 720–EDCA–01**

ANTHONY L. UREMOVICH REGISTERED No. 18095 STATE OF INDIANA PROFESSIONAL ENGINEER

DESIGN STANDARDS ENGINEER

DETAILS PLACED IN THIS FORMAT	11-15-99
/s/ Anthony L. Uremovich DESIGN STANDARDS ENGINEER	11-15-99 DATE
/s/ Firooz Zandi CHIEF HIGHWAY ENGINEER	11-15-99 DATE
ORIGINALLY APPROVED	9-01-98

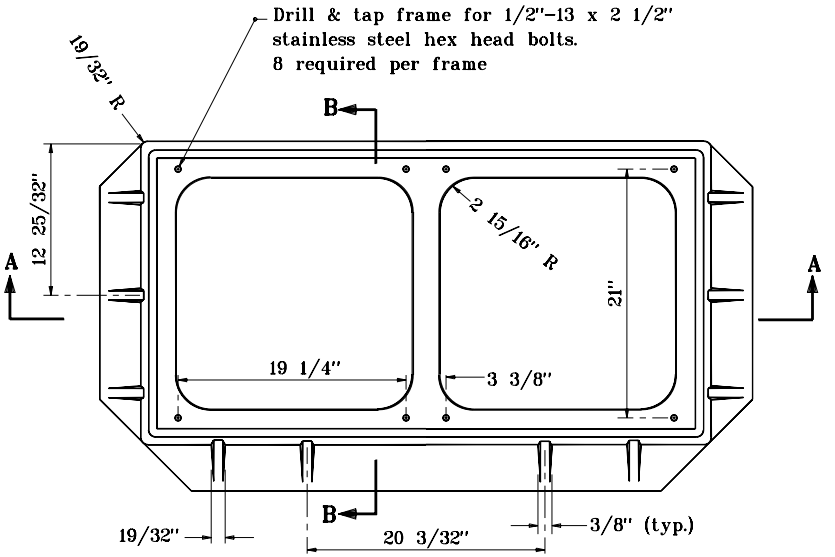

PLAN

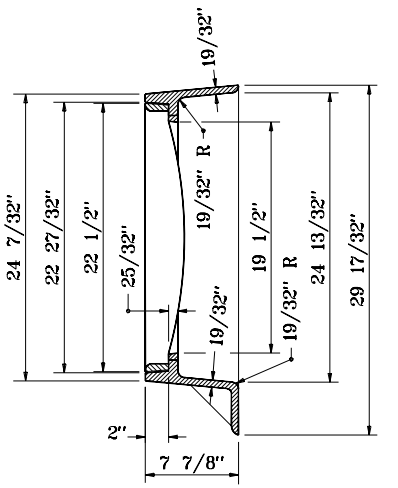

SECTION B-B

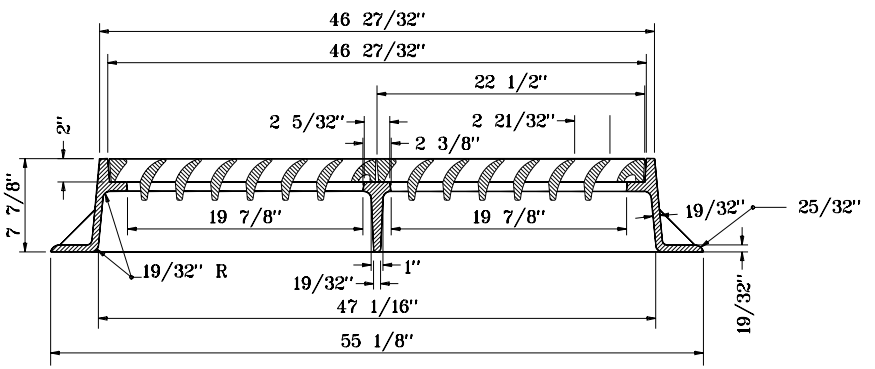

SECTION A-A

FRAME
CASTING TYPE 5

INDIANA DEPARTMENT OF TRANSPORTATION	
CASTING TYPE 5 FRAME SEPTEMBER 2001	
STANDARD DRAWING NO. **E 720-ICCA-01**	
RICHARD L. VanCLEAVE REGISTERED No. 9750 STATE OF INDIANA PROFESSIONAL ENGINEER DESIGN STANDARDS ENGINEER	/s/ Anthony L. Uremovich — DESIGN STANDARDS ENGINEER — 9-04-01 DATE /s/ Firooz Zandi — CHIEF HIGHWAY ENGINEER — 9-04-01 DATE

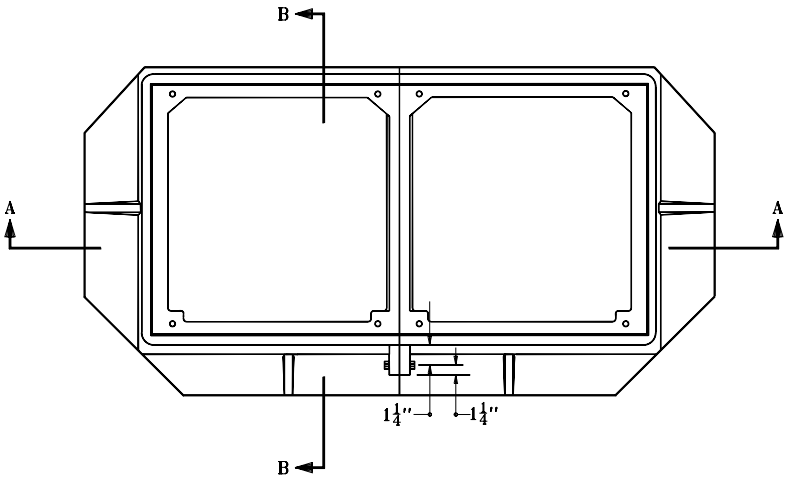

PLAN

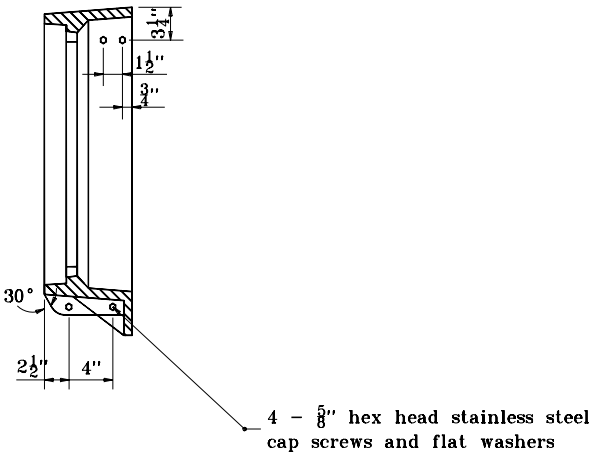

SECTION B–B

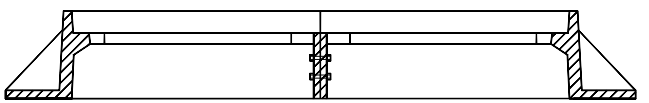

SECTION A–A

INDIANA DEPARTMENT OF TRANSPORTATION

CASTING TYPE 5 ALTERNATE BOLTED FRAME

SEPTEMBER 2001

STANDARD DRAWING NO. **E 720–ICCA–02**

RICHARD L. VanCLEAVE REGISTERED No. 9750 STATE OF INDIANA PROFESSIONAL ENGINEER

DESIGN STANDARDS ENGINEER

/s/ *Anthony L. Uremovich* 9–04–01
DESIGN STANDARDS ENGINEER DATE

/s/ *Firooz Zandi* 9–04–01
CHIEF HIGHWAY ENGINEER DATE

Grate is bolted to
frame with 1/2" hex head
SS bolts. 4 req'd. each grate.

BARRIER SIDE

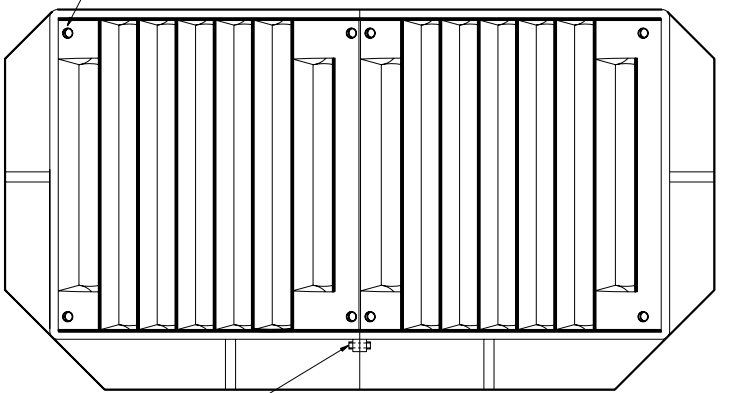

4-5/8" dia. bolts

Left hand flow

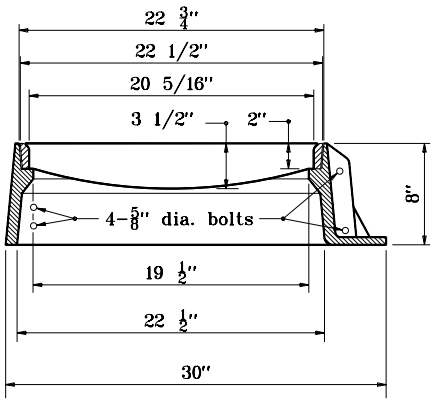

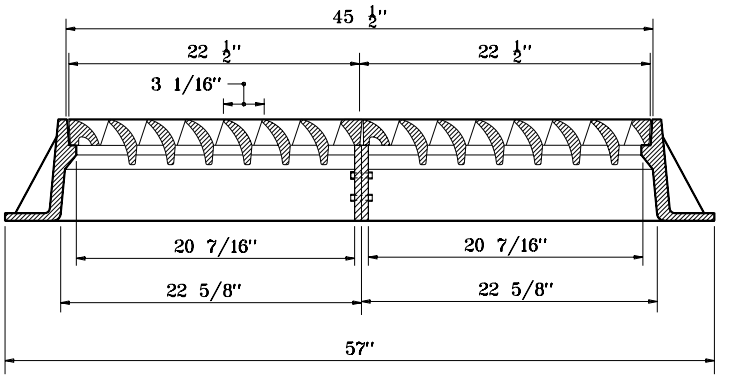

FRAME AND GRATE
CASTING TYPE 5 (ALTERNATE)

INDIANA DEPARTMENT OF TRANSPORTATION

CASTING TYPE 5 (ALTERNATE)
FRAME AND GRATE
SEPTEMBER 2001

STANDARD DRAWING NO. **E 720-ICCA-03**

ANTHONY L. UREMOVICH REGISTERED No. 18095 STATE OF INDIANA PROFESSIONAL ENGINEER

DESIGN STANDARDS ENGINEER

/s/ Anthony L. Uremovich 9-04-01
DESIGN STANDARDS ENGINEER DATE

/s/ Firooz Zandi 9-04-01
CHIEF HIGHWAY ENGINEER DATE

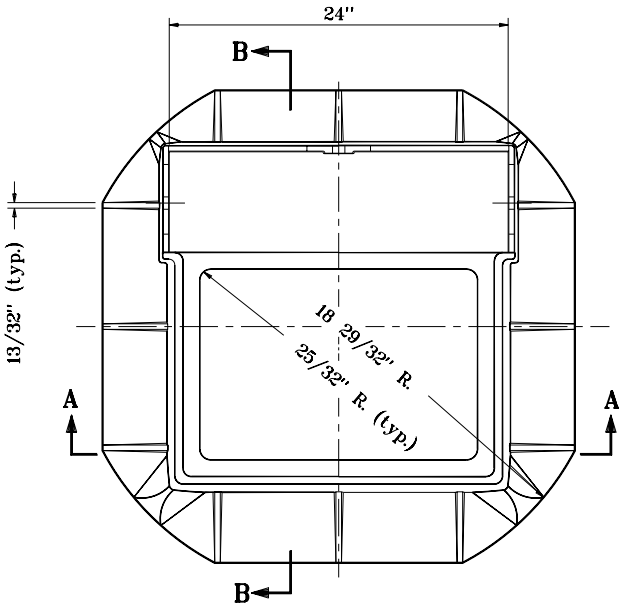

PLAN

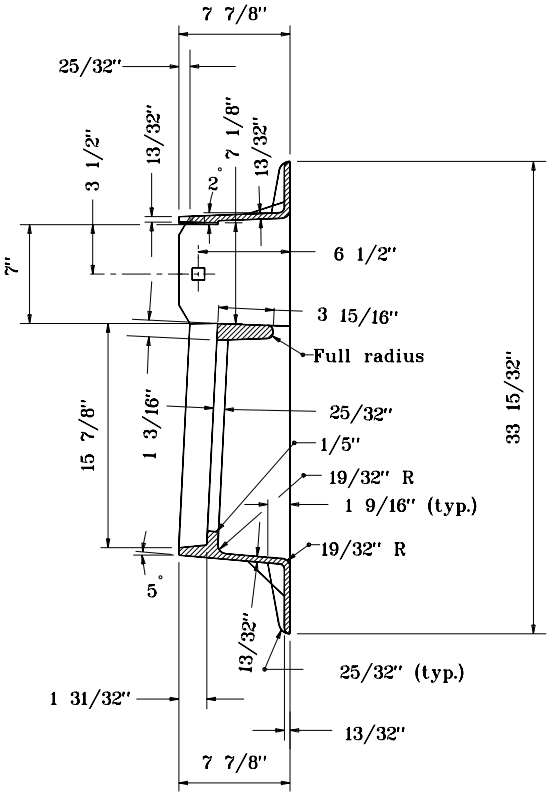

SECTION B–B

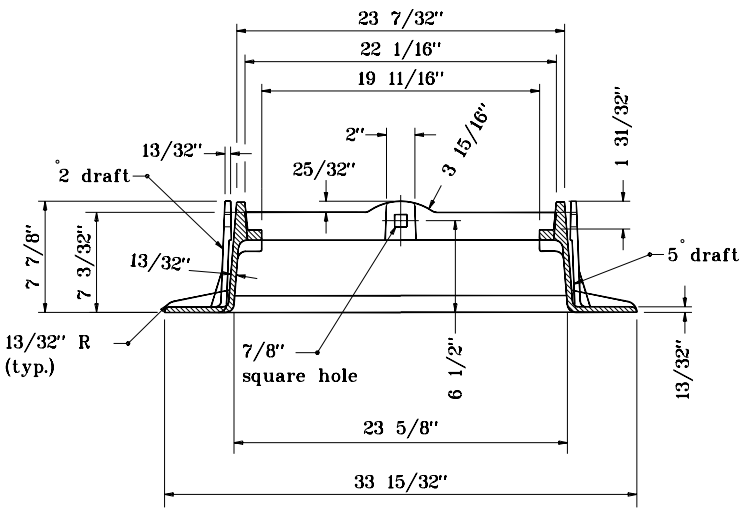

SECTION A–A

FRAME
CASTING TYPE 8

INDIANA DEPARTMENT OF TRANSPORTATION

CASTING TYPE 8
FRAME
SEPTEMBER 1998

STANDARD DRAWING NO. E 720-ICCA-04

ANTHONY L. UREMOVICH REGISTERED No. 18095 STATE OF INDIANA PROFESSIONAL ENGINEER

DESIGN STANDARDS ENGINEER

DETAILS PLACED IN THIS FORMAT 11-15-99

/s/ Anthony L. Uremovich 11-15-99
DESIGN STANDARDS ENGINEER DATE

/s/ Firooz Zandi 11-15-99
CHIEF HIGHWAY ENGINEER DATE

ORIGINALLY APPROVED 9-01-98

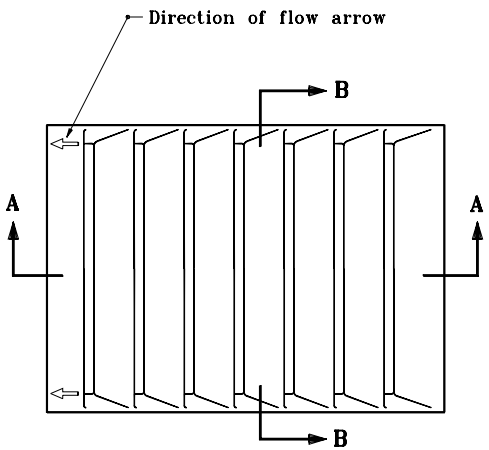

PLAN

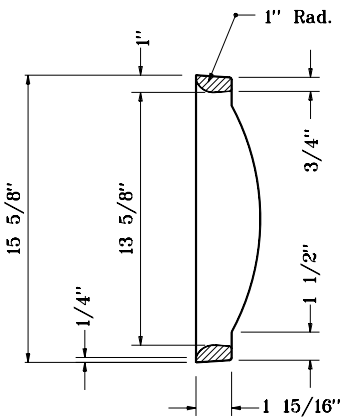

SECTION B-B

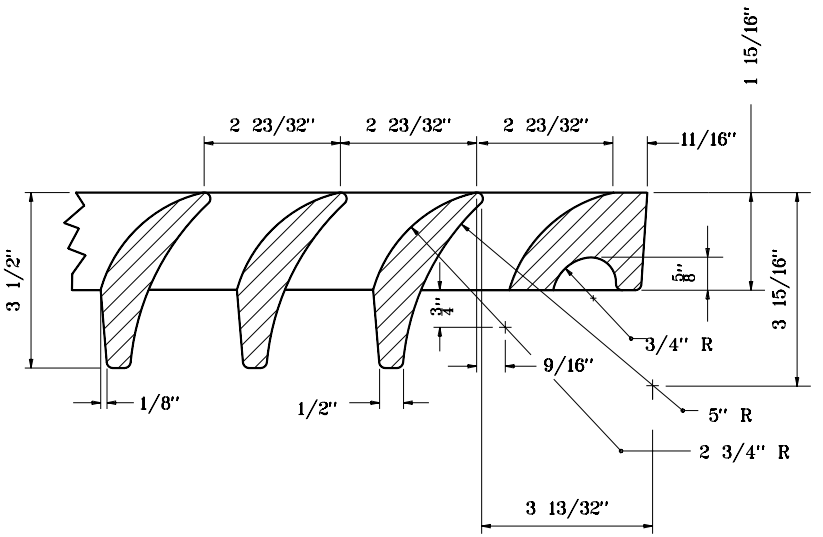

DETAIL OF SECTION A-A
GRATE
CASTING TYPE 8

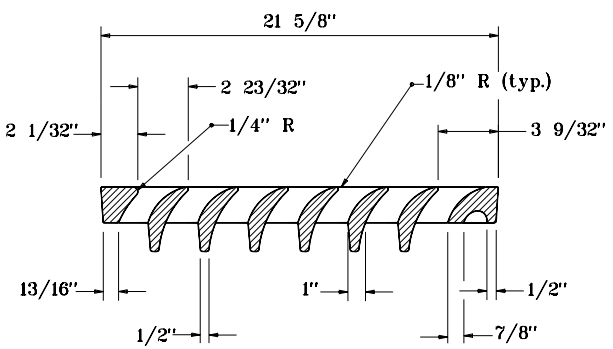

SECTION A-A

INDIANA DEPARTMENT OF TRANSPORTATION

CASTING TYPE 8
GRATE
SEPTEMBER 1998

STANDARD DRAWING NO. E 720-ICCA-05

ANTHONY L. UREMOVICH REGISTERED No. 18095 STATE OF INDIANA PROFESSIONAL ENGINEER

DESIGN STANDARDS ENGINEER

DETAILS PLACED IN THIS FORMAT	11-15-99
/s/ Anthony L. Uremovich DESIGN STANDARDS ENGINEER	11-15-99 DATE
/s/ Firooz Zandi CHIEF HIGHWAY ENGINEER	11-15-99 DATE
ORIGINALLY APPROVED	9-01-98

GENERAL NOTES

1. Curb box adjustable from $5\frac{1}{4}''$ to $8\frac{3}{4}''$.

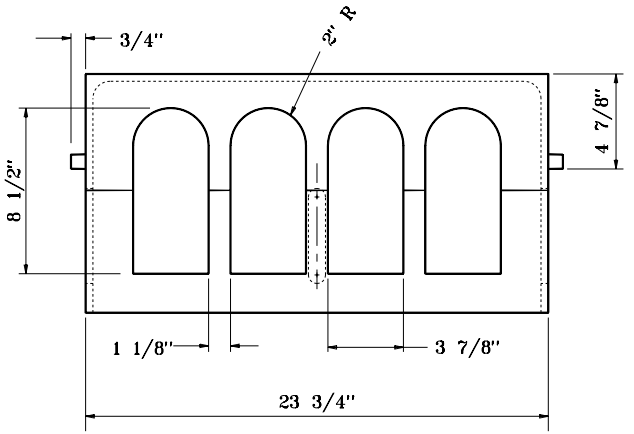

FRONT

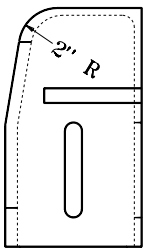

SIDE

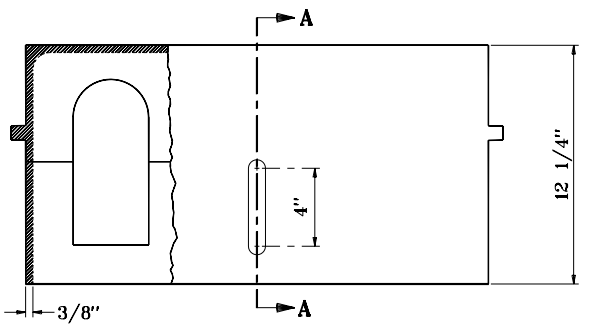

BACK

CURB BOX
CASTING TYPE 8

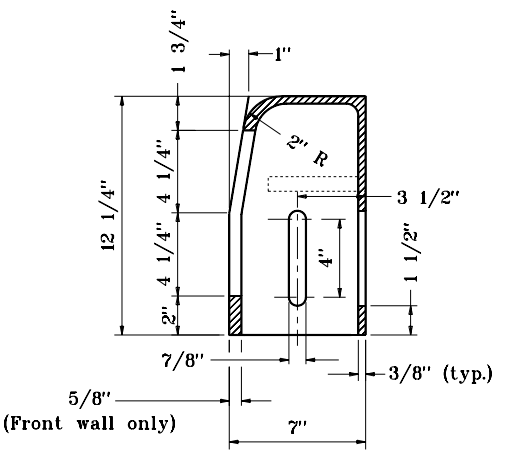

SECTION A-A

INDIANA DEPARTMENT OF TRANSPORTATION	
CASTING TYPE 8 CURB BOX SEPTEMBER 1998	
STANDARD DRAWING NO. E 720-ICCA-06	
ANTHONY L. UREMOVICH REGISTERED No. 18095 STATE OF INDIANA PROFESSIONAL ENGINEER	DETAILS PLACED IN THIS FORMAT 11-15-99
	/s/ Anthony L. Uremovich 11-15-99 DESIGN STANDARDS ENGINEER DATE
	/s/ Firooz Zandi 11-15-99 CHIEF HIGHWAY ENGINEER DATE
DESIGN STANDARDS ENGINEER	ORIGINALLY APPROVED 9-01-98

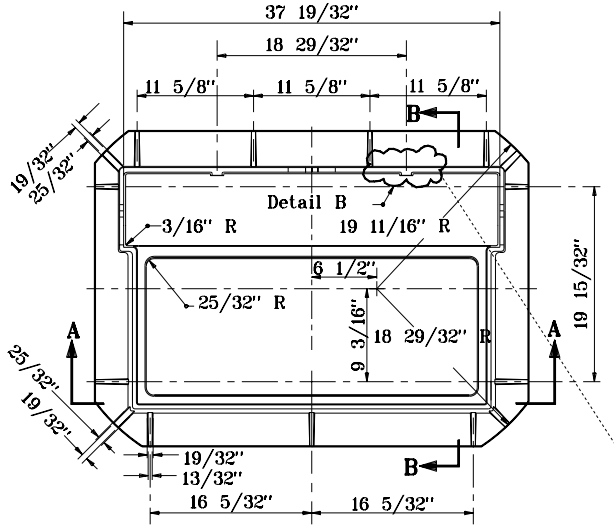

PLAN

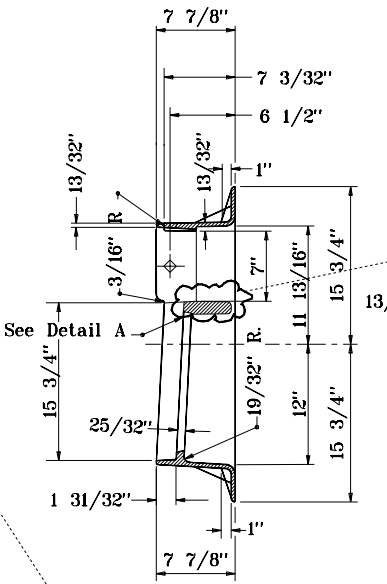

SECTION B-B

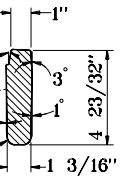

DETAIL A

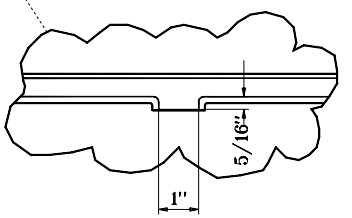

DETAIL B

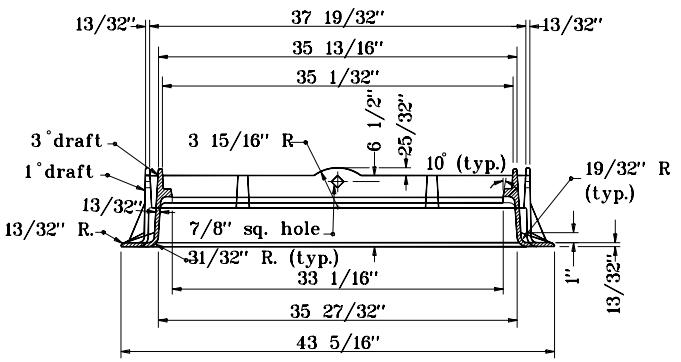

SECTION A-A

FRAME
CASTING TYPE 10

INDIANA DEPARTMENT OF TRANSPORTATION

CASTINGS TYPE 10
FRAME

SEPTEMBER 1998

STANDARD DRAWING NO. **E 720-ICCA-08**

ANTHONY L. UREMOVICH REGISTERED No. 18095 STATE OF INDIANA PROFESSIONAL ENGINEER

DESIGN STANDARDS ENGINEER

DETAILS PLACED IN THIS FORMAT	11-15-99
/s/ Anthony L. Uremovich DESIGN STANDARDS ENGINEER	11-15-99 DATE
/s/ Firooz Zandi CHIEF HIGHWAY ENGINEER	11-15-99 DATE
ORIGINALLY APPROVED	9-01-98

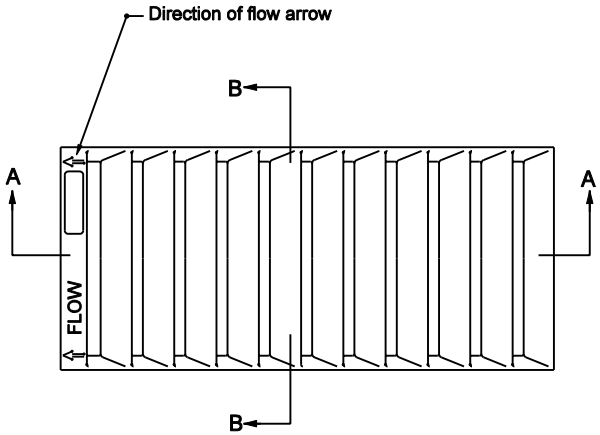

PLAN

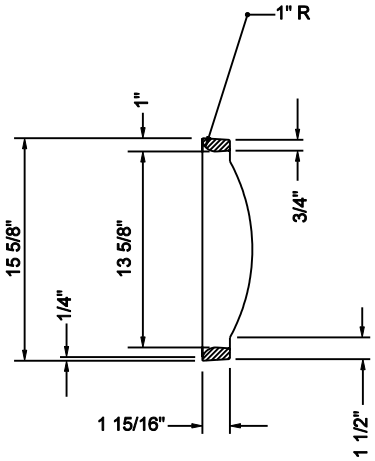

SECTION B-B

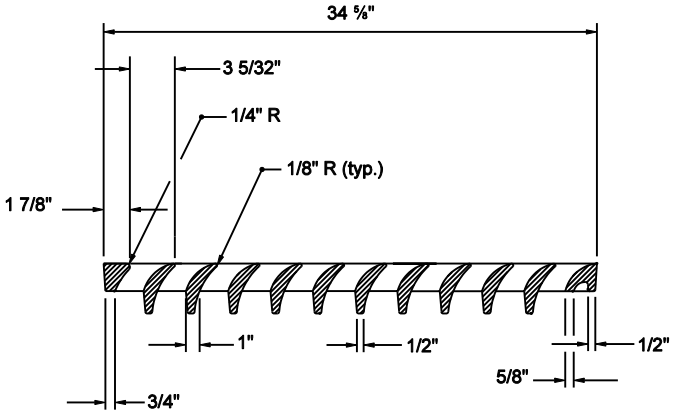

SECTION A-A

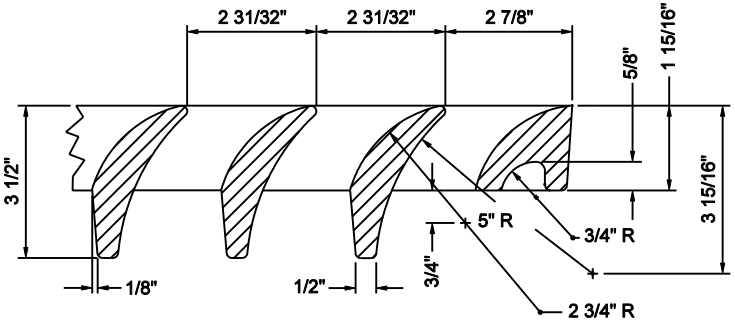

DETAIL OF SECTION A-A

GRATE
CASTING TYPE 10

INDIANA DEPARTMENT OF TRANSPORTATION

CASTING TYPE 10
GRATE

SEPTEMBER 2003

STANDARD DRAWING NO. E 720-ICCA-09

RICHARD L. VanCLEAVE REGISTERED No. 9750 STATE OF INDIANA PROFESSIONAL ENGINEER

DESIGN STANDARDS ENGINEER

/s/ Richard L. VanCleave 9-02-03
DESIGN STANDARDS ENGINEER DATE

/s/ Richard K. Smutzer 9-02-03
CHIEF HIGHWAY ENGINEER DATE

GENERAL NOTES

1. Curb box adjustable 5 1/4" t0 8 3/4".

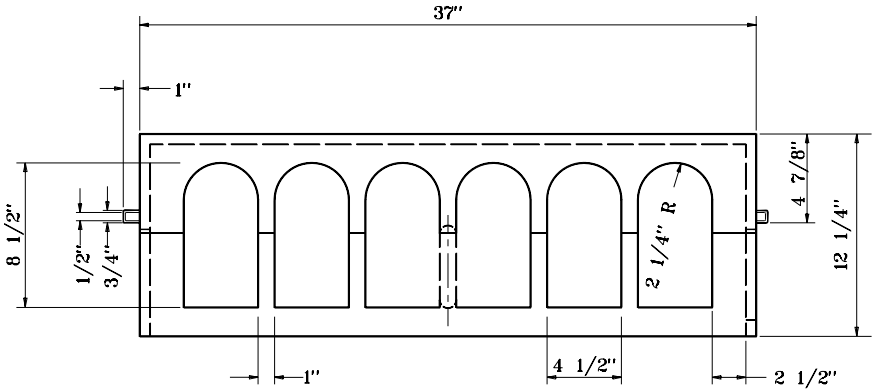

FRONT

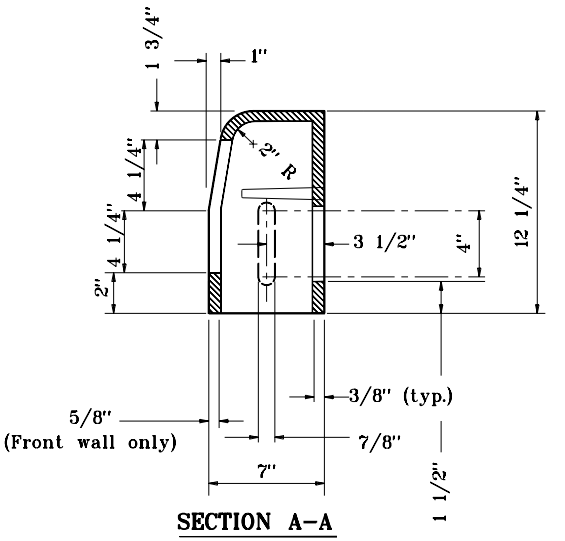

SECTION A-A

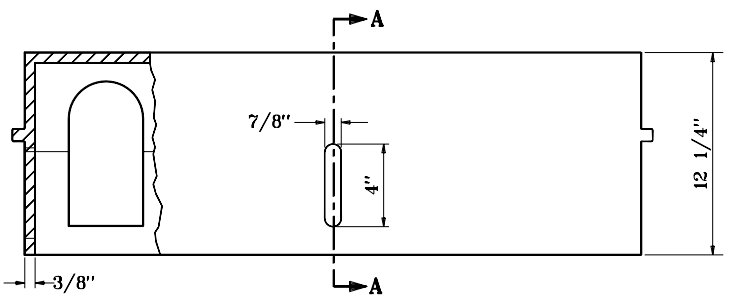

BACK

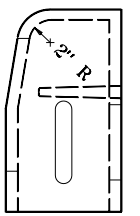

SIDE

CURB BOX
CASTING 10

INDIANA DEPARTMENT OF TRANSPORTATION

CASTING TYPE 10 CURB BOX

SEPTEMBER 1998

STANDARD DRAWING NO. E 720-ICCA-09A

ANTHONY L. UREMOVICH REGISTERED No. 18095 STATE OF INDIANA PROFESSIONAL ENGINEER

DESIGN STANDARDS ENGINEER

DETAILS PLACED IN THIS FORMAT	11-15-99
/s/ Anthony L. Uremovich DESIGN STANDARDS ENGINEER	11-15-99 DATE
/s/ Firooz Zandi CHIEF HIGHWAY ENGINEER	11-15-99 DATE
ORIGINALLY APPROVED	9-01-98

NOTES

1. Bar spacing shall be 1 ⅞" c. to.c. minimum and 2 ⅜" c. to c. maximum.
2. The dimensions of the angle iron frame shall be as shown except that the A dimension may vary according to type of grating used.
3. For Section A-A, Section B-B see Standard Drawing E 720-INST-08.

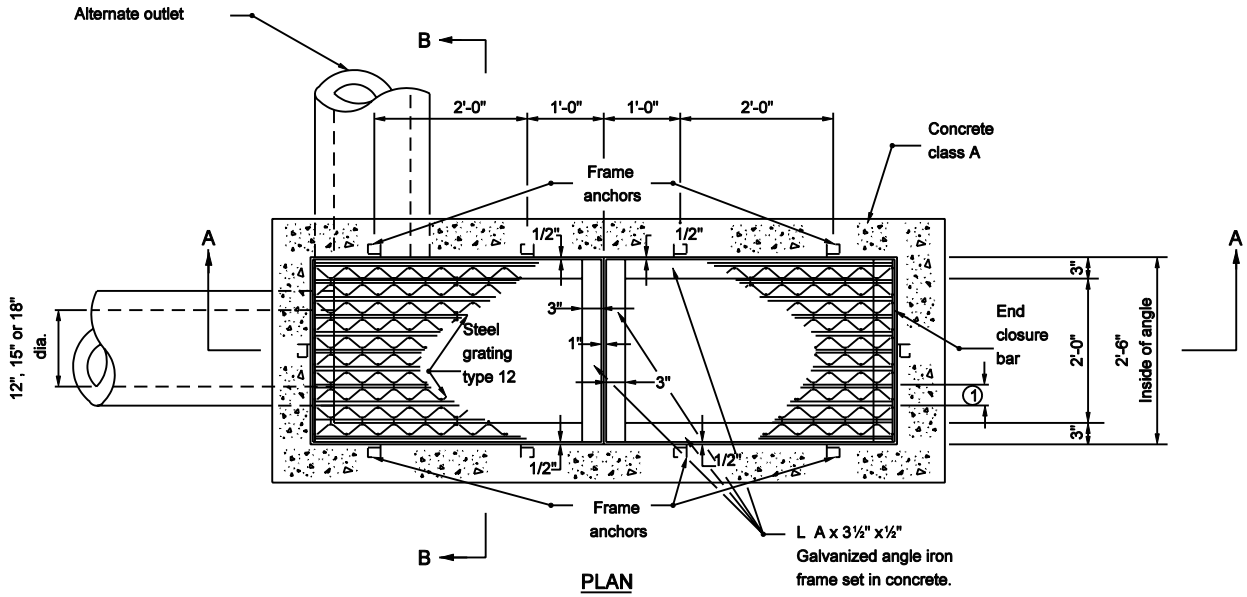

PLAN

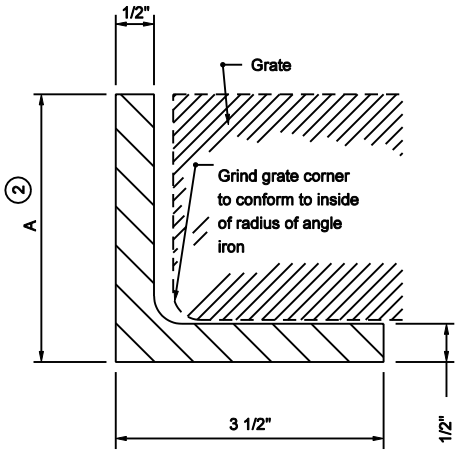

ANGLE IRON FRAME DETAIL

INDIANA DEPARTMENT OF TRANSPORTATION

STEEL GRATING TYPE 12 FRAME AND GRATE

SEPTEMBER 2003

STANDARD DRAWING NO. E 720-ICCA-10

RICHARD L. VanCLEAVE REGISTERED No. 9750 STATE OF INDIANA PROFESSIONAL ENGINEER

DESIGN STANDARDS ENGINEER

/s/ Richard L. VanCleave 9-02-03
DESIGN STANDARDS ENGINEER DATE

/s/ Richard K. Smutzer 9-02-03
CHIEF HIGHWAY ENGINEER DATE

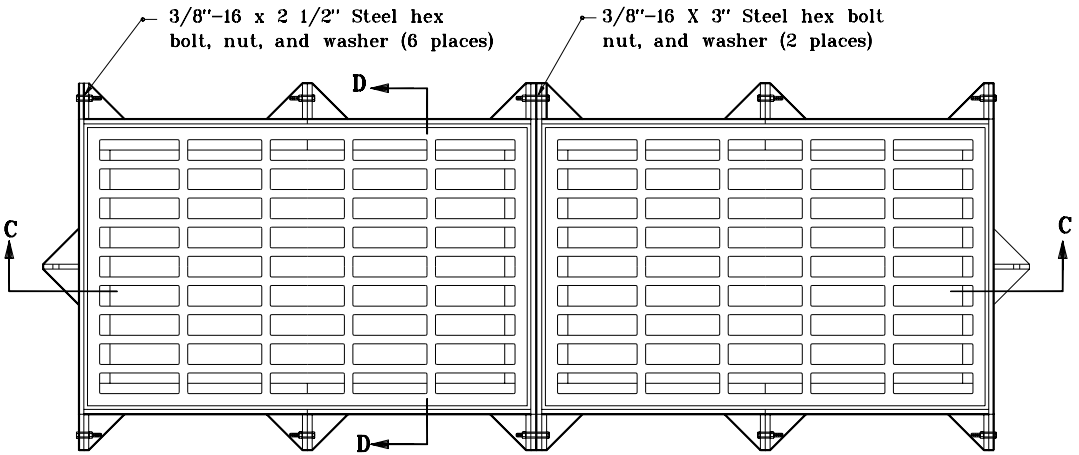

PLAN

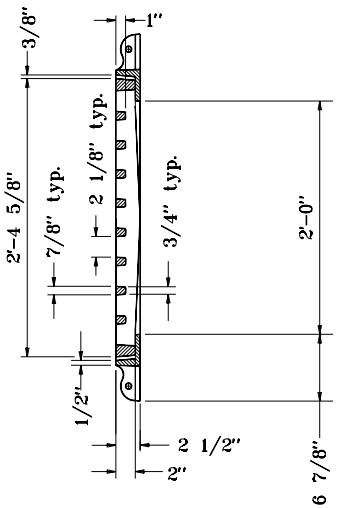

SECTION D-D

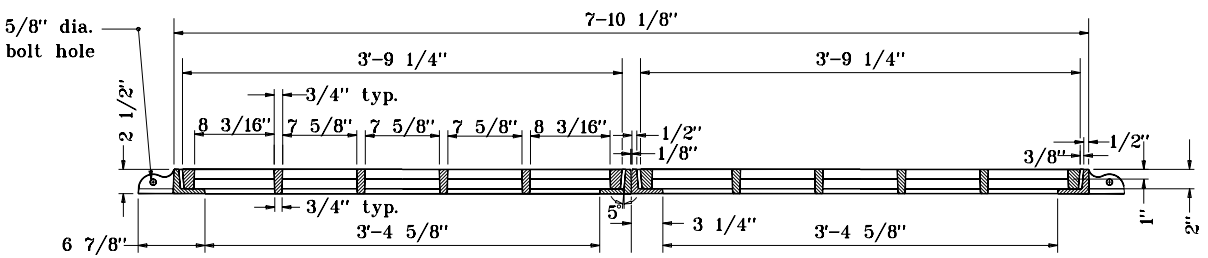

SECTION A-A

GRATE AND FRAME CASTING
ALTERNATE TYPE 12

INDIANA DEPARTMENT OF TRANSPORTATION

CASTING TYPE 12 (ALTERNATE)
FRAME AND GRATE

SEPTEMBER 1998

STANDARD DRAWING NO. **E 720-ICCA-11**

ANTHONY L. UREMOVICH REGISTERED No. 18095 STATE OF INDIANA PROFESSIONAL ENGINEER

DESIGN STANDARDS ENGINEER

DETAILS PLACED IN THIS FORMAT	11-15-99
/s/ Anthony L. Uremovich DESIGN STANDARDS ENGINEER	11-15-99 DATE
/s/ Firooz Zandi CHIEF HIGHWAY ENGINEER	11-15-99 DATE
ORIGINALLY APPROVED	9-01-98

GENERAL NOTES

(1) Spacing shall be $1\frac{7}{8}$" c. to c. min., and $2\frac{3}{8}$" c. to c. max.

(2) The dimensions of the angle iron frame shall be as shown except that the A dimension may vary according to type of grating used.

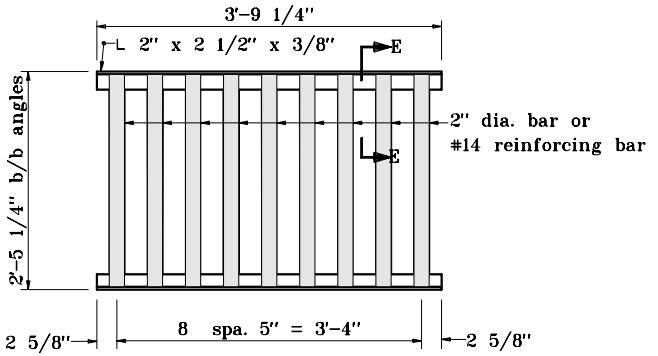

ALTERNATE STEEL GRATING
(To be used with steel frame type 12 or 12A)

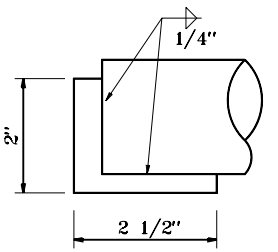

SECTION E-E

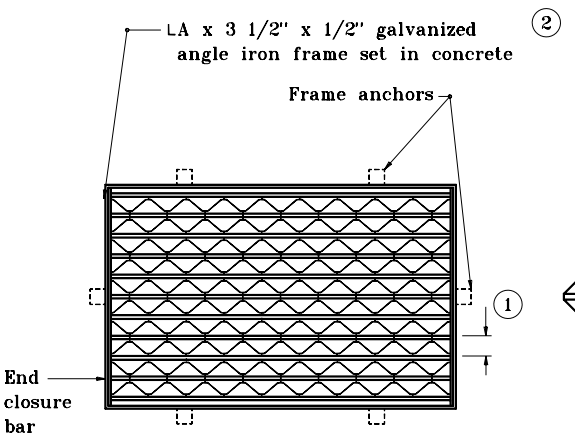

STEEL GRATING AND FRAME
TYPE 12A

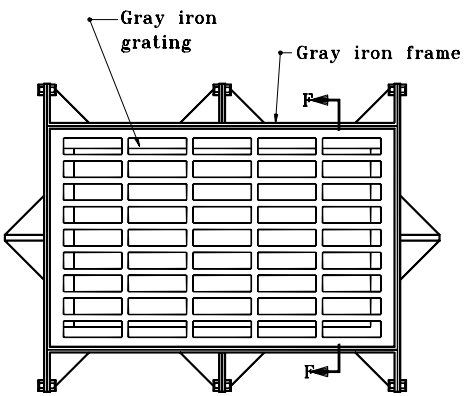

GRATE AND FRAME CASTING
ALTERNATE TYPE 12A

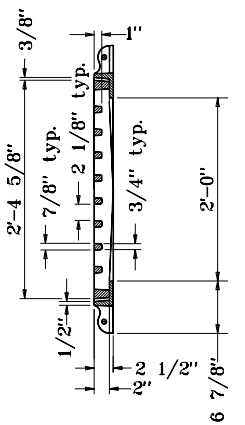

SECTION F-F

INDIANA DEPARTMENT OF TRANSPORTATION

STEEL GRATING TYPE 12A
FRAME AND GRATE
SEPTEMBER 1998

STANDARD DRAWING NO. **E 720-ICCA-12**

ANTHONY L. UREMOVICH REGISTERED No. 18095 STATE OF INDIANA PROFESSIONAL ENGINEER

DESIGN STANDARDS ENGINEER

DETAILS PLACED IN THIS FORMAT	11-15-99
/s/ Anthony L. Uremovich DESIGN STANDARDS ENGINEER	11-15-99 DATE
/s/ Firooz Zandi CHIEF HIGHWAY ENGINEER	11-15-99 DATE
ORIGINALLY APPROVED	9-01-98

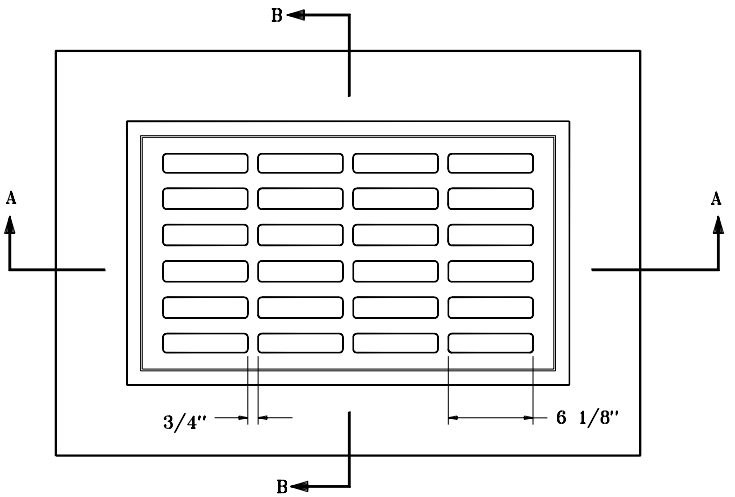

PLAN

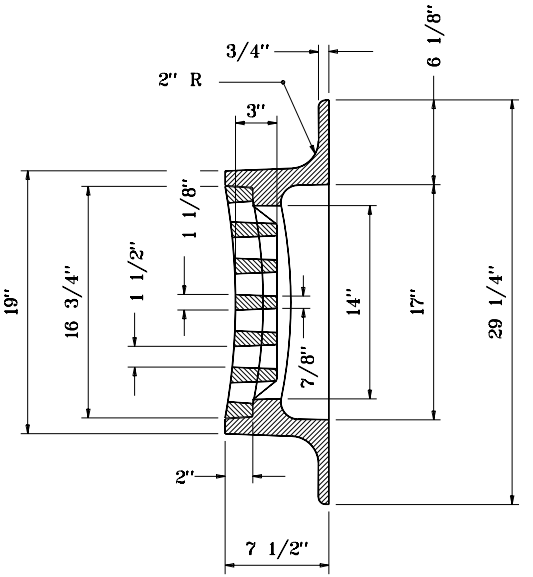

SECTION B–B

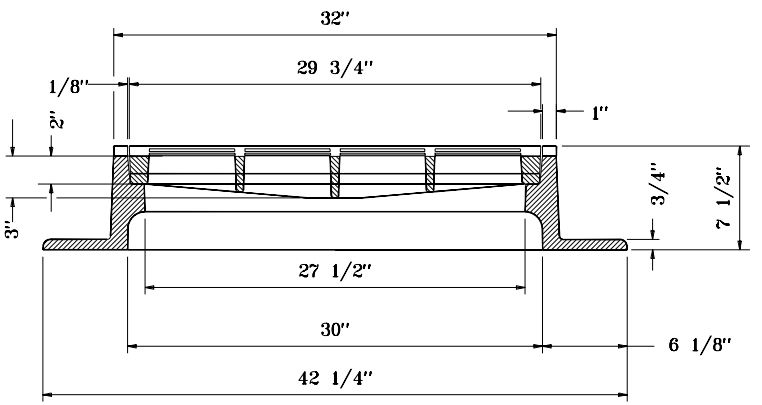

SECTION A–A

FRAME AND GRATE
CASTING TYPE 13

INDIANA DEPARTMENT OF TRANSPORTATION

CASTING TYPE 13
FRAME & GRATE
SEPTEMBER 1998

STANDARD DRAWING NO. **E 720–ICCA–13**

ANTHONY L. URENOVICH REGISTERED No. 18095 STATE OF INDIANA PROFESSIONAL ENGINEER

DESIGN STANDARDS ENGINEER

DETAILS PLACED IN THIS FORMAT	11-15-99
/s/ Anthony L. Uremovich DESIGN STANDARDS ENGINEER	11-15-99 DATE
/s/ Firooz Zandi CHIEF HIGHWAY ENGINEER	11-15-99 DATE
ORIGINALLY APPROVED	9-01-98

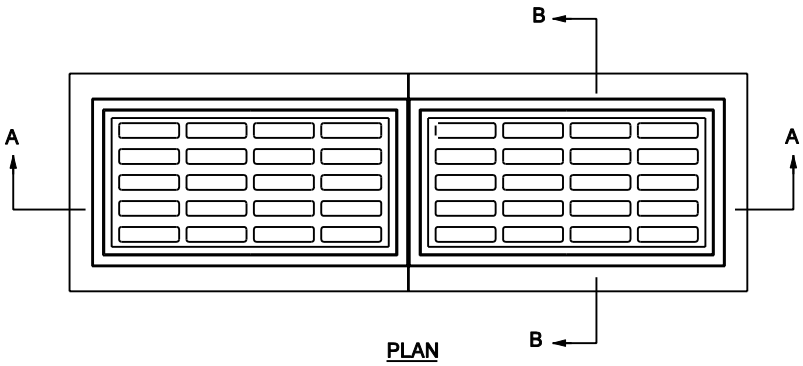

PLAN

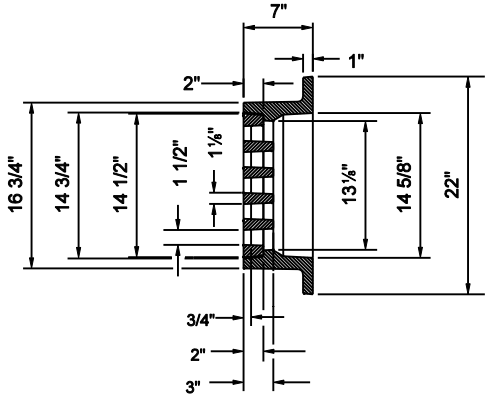

SECTION B-B

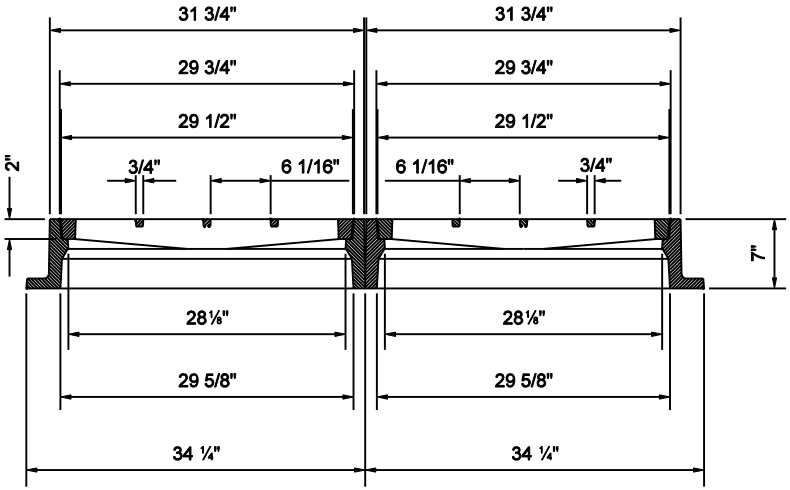

SECTION A-A

FRAME AND GRATE
CASTING TYPE 14

INDIANA DEPARTMENT OF TRANSPORTATION

CASTING TYPE 14
FRAME AND GRATE

SEPTEMBER 2003

STANDARD DRAWING NO. E 720-ICCA-15

RICHARD L. VanCLEAVE
REGISTERED
No. 9750
STATE OF INDIANA
PROFESSIONAL ENGINEER

DESIGN STANDARDS ENGINEER

/s/ Richard L. VanCleave 9-02-03
DESIGN STANDARDS ENGINEER DATE

/s/ Richard K. Smutzer 9-02-03
CHIEF HIGHWAY ENGINEER DATE

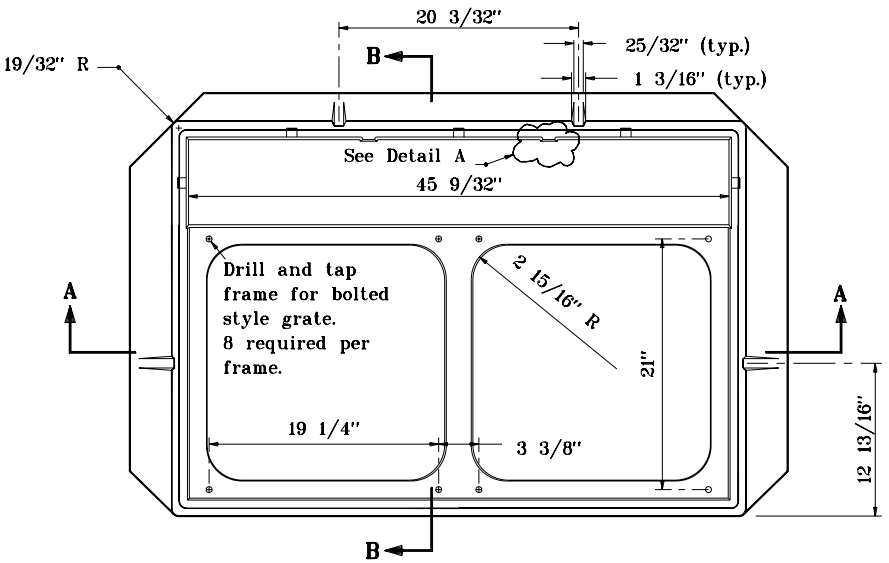

PLAN

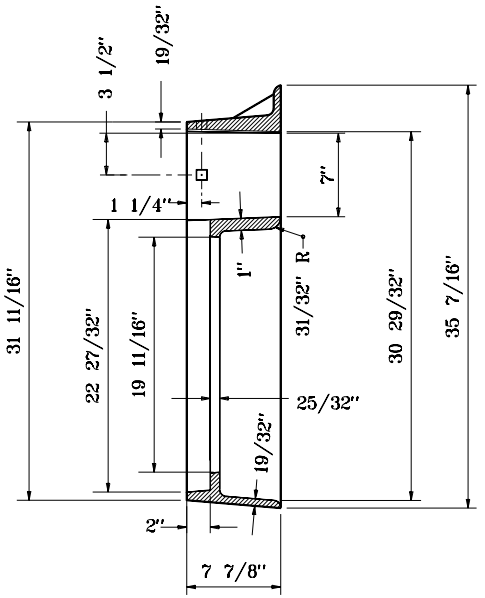

SECTION B–B

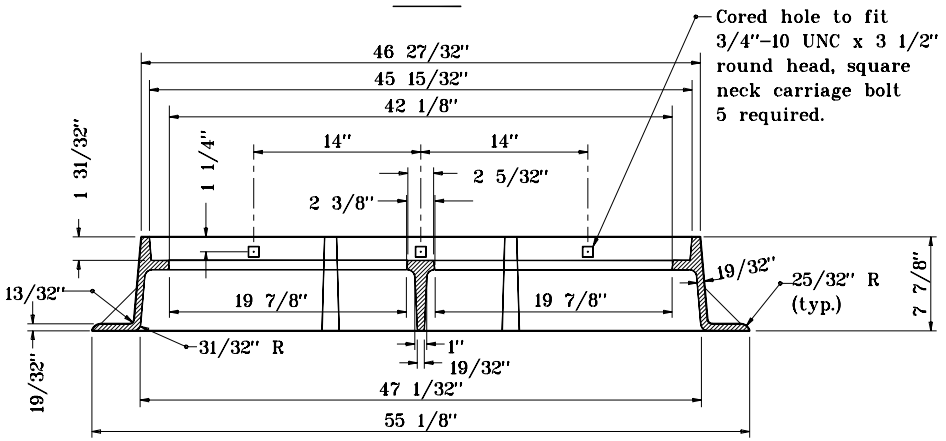

SECTION A–A

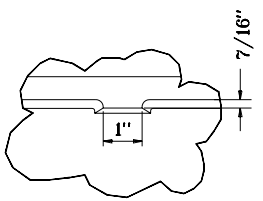

DETAIL A

FRAME
CASTING TYPE 15

INDIANA DEPARTMENT OF TRANSPORTATION

CASTING TYPE 15
FRAME
SEPTEMBER 1998

STANDARD DRAWING NO. **E 720-ICCA-16**

ANTHONY L. UREMOVICH REGISTERED No. 18095 STATE OF INDIANA PROFESSIONAL ENGINEER

DESIGN STANDARDS ENGINEER

DETAILS PLACED IN THIS FORMAT 11-15-99

/s/ Anthony L. Uremovich 11-15-99
DESIGN STANDARDS ENGINEER DATE

/s/ Firooz Zandi 11-15-99
CHIEF HIGHWAY ENGINEER DATE

ORIGINALLY APPROVED 9-01-98

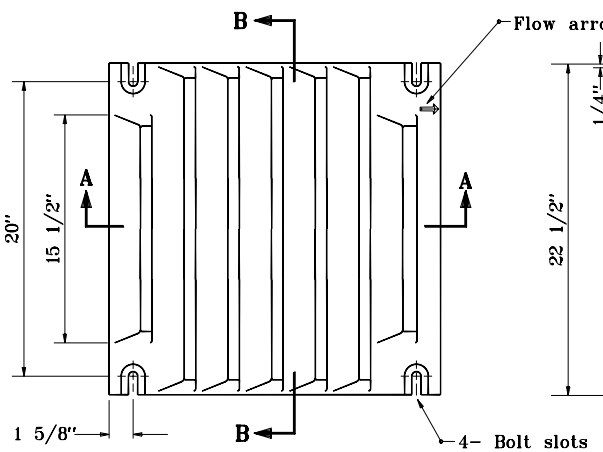

PLAN

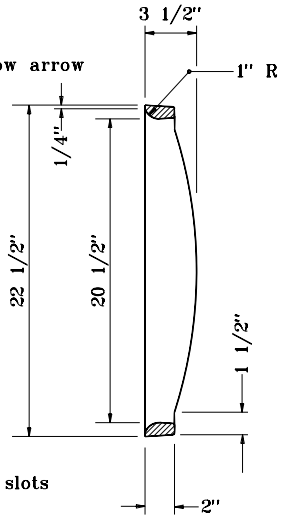

SECTION B-B

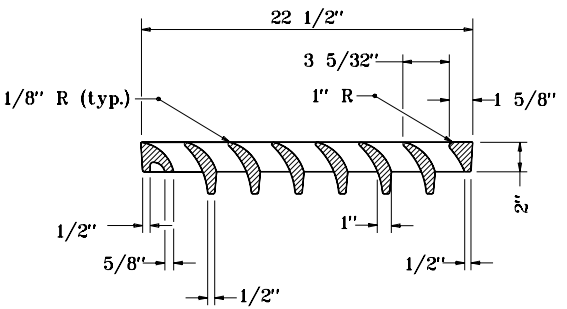

SECTION A-A

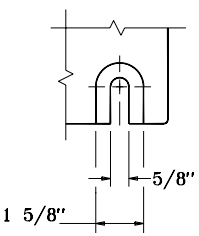

BOLT SLOT DETAIL

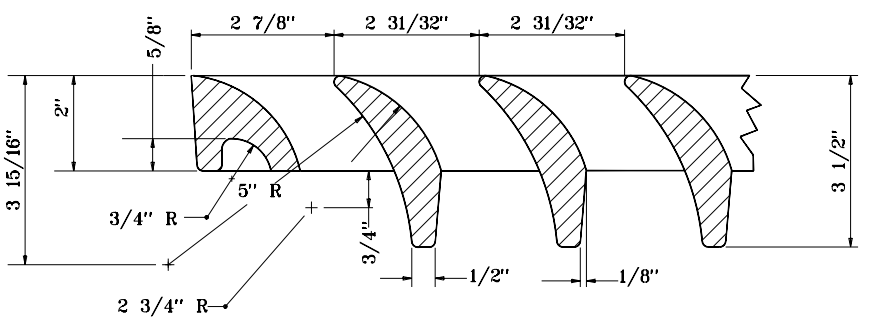

INDIANA DEPARTMENT OF TRANSPORTATION

CASTING TYPE 15 GRATE

SEPTEMBER 1998

STANDARD DRAWING NO. E 720-ICCA-17

ANTHONY L. UREMOVICH REGISTERED No. 18095 STATE OF INDIANA PROFESSIONAL ENGINEER

DESIGN STANDARDS ENGINEER

DETAILS PLACED IN THIS FORMAT	11-15-99
/s/ Anthony L. Uremovich DESIGN STANDARDS ENGINEER	11-15-99 DATE
/s/ Firooz Zandi CHIEF HIGHWAY ENGINEER	11-15-99 DATE
ORIGINALLY APPROVED	9-01-98

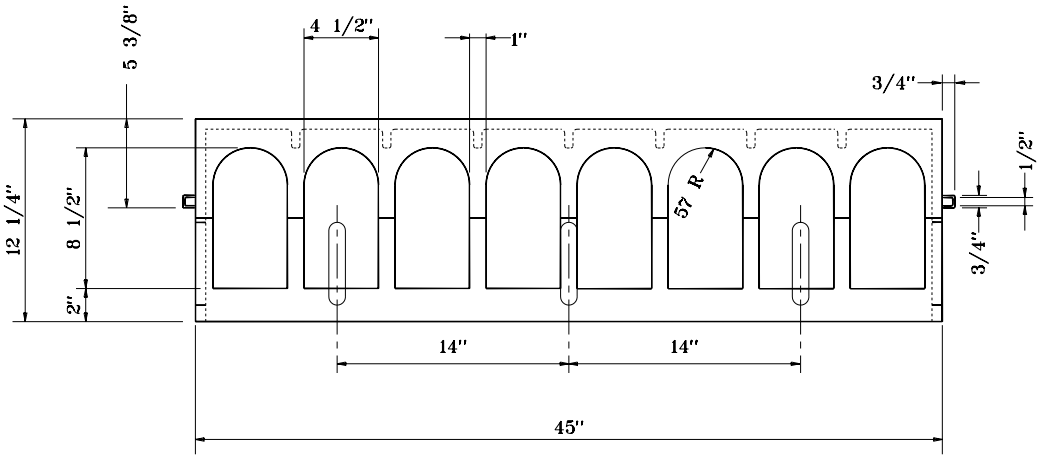

FRONT

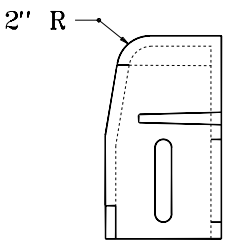

SIDE

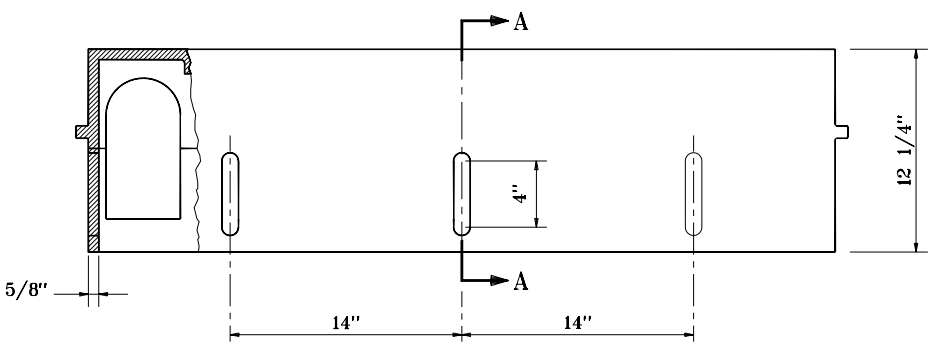

BACK

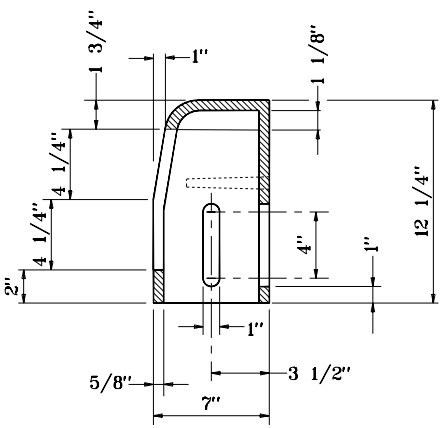

SECTION A-A

INDIANA DEPARTMENT OF TRANSPORTATION

CASTING TYPE 15
CURB BOX

SEPTEMBER 1998

STANDARD DRAWING NO. **E 720-ICCA-18**

ANTHONY L. UREMOVICH REGISTERED No. 18095 STATE OF INDIANA PROFESSIONAL ENGINEER

DESIGN STANDARDS ENGINEER

DETAILS PLACED IN THIS FORMAT	11-15-99
/s/ Anthony L. Uremovich DESIGN STANDARDS ENGINEER	11-15-99 DATE
/s/ Firooz Zandi CHIEF HIGHWAY ENGINEER	11-15-99 DATE
ORIGINALLY APPROVED	9-01-98

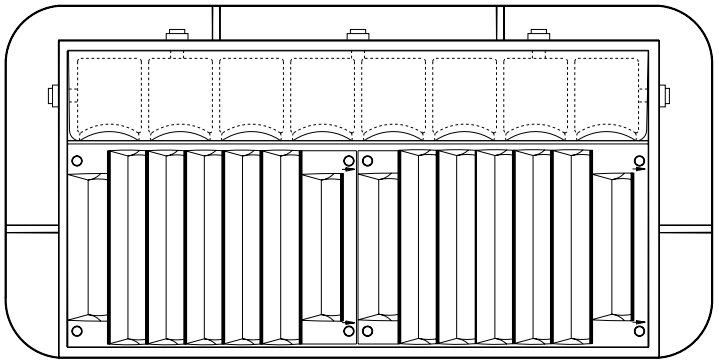

GENERAL NOTES

1. Curb adjustment $5\frac{1}{2}''$ to $9\frac{1}{2}''$.

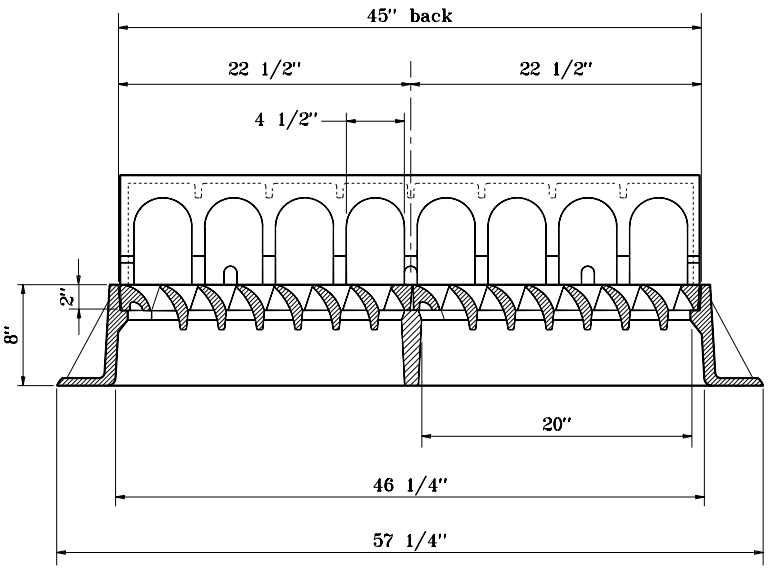

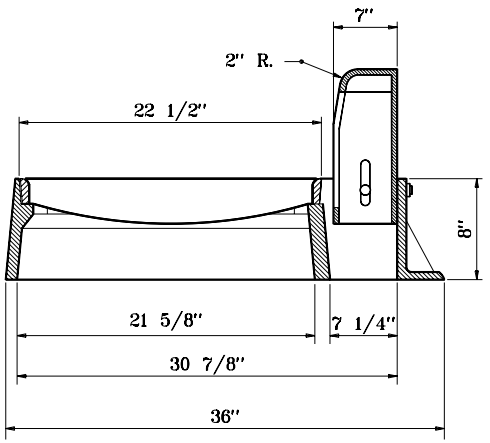

INDIANA DEPARTMENT OF TRANSPORTATION

CASTING TYPE 15 (ALTERNATE)
FRAME, GRATE, AND CURB BOX

SEPTEMBER 1998

STANDARD DRAWING NO. **E 720-ICCA-19**

ANTHONY L. UREMOVICH REGISTERED No. 18095 STATE OF INDIANA PROFESSIONAL ENGINEER

DESIGN STANDARDS ENGINEER

DETAILS PLACED IN THIS FORMAT	11-15-99
/s/ Anthony L. Uremovich DESIGN STANDARDS ENGINEER	11-15-99 DATE
/s/ Firooz Zandi CHIEF HIGHWAY ENGINEER	11-15-99 DATE
ORIGINALLY APPROVED	9-01-98

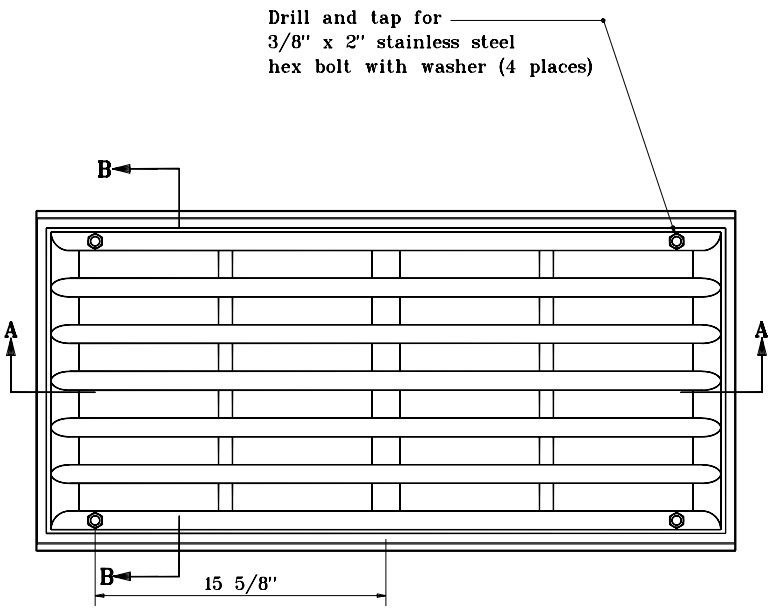

PLAN

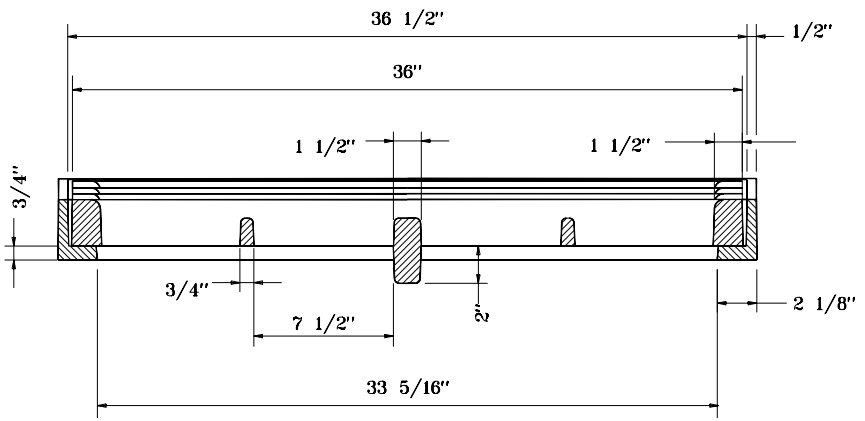

SECTION A–A

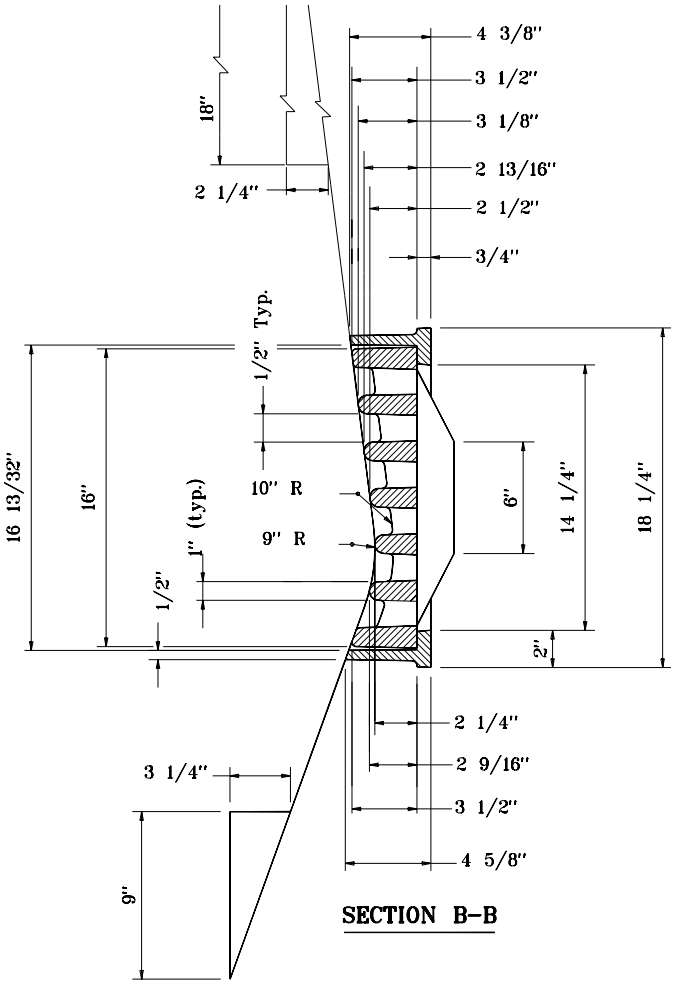

SECTION B–B

INDIANA DEPARTMENT OF TRANSPORTATION

INLET CASTING
TYPE 6

SEPTEMBER 1998

STANDARD DRAWING NO. E 720-INCA-01

ANTHONY L. UREMOVICH REGISTERED No. 18095 STATE OF INDIANA PROFESSIONAL ENGINEER

DESIGN STANDARDS ENGINEER

DETAILS PLACED IN THIS FORMAT	11-15-99
/s/ Anthony L. Uremovich DESIGN STANDARDS ENGINEER	11-15-99 DATE
/s/ Firooz Zandi CHIEF HIGHWAY ENGINEER	11-15-99 DATE
ORIGINALLY APPROVED	9-01-98

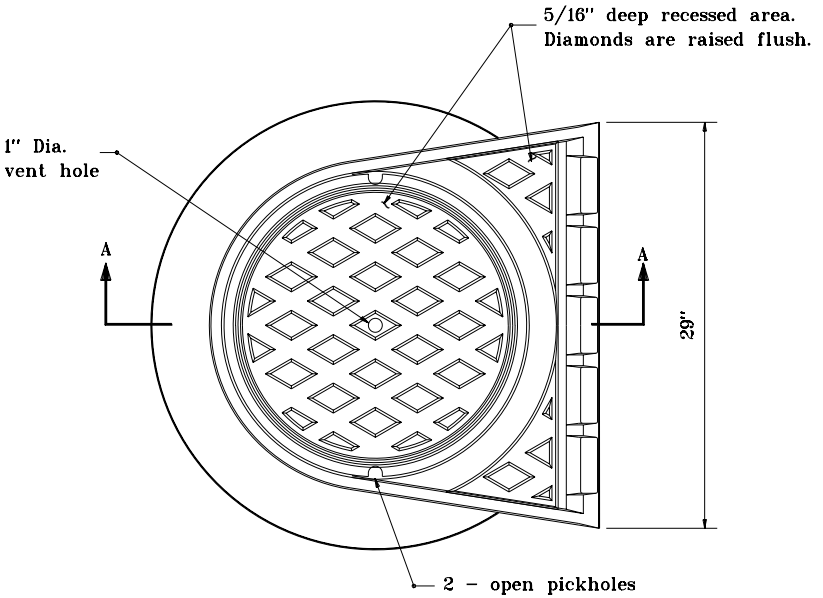

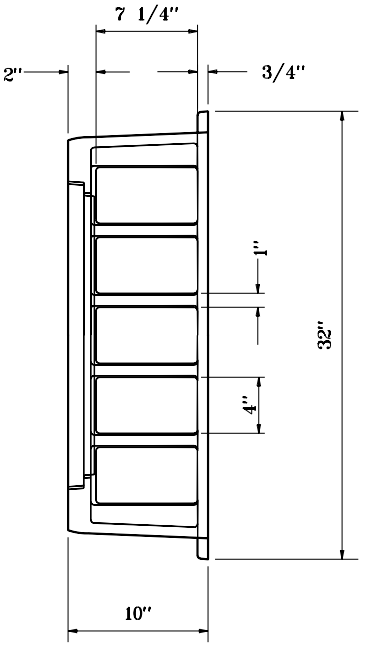

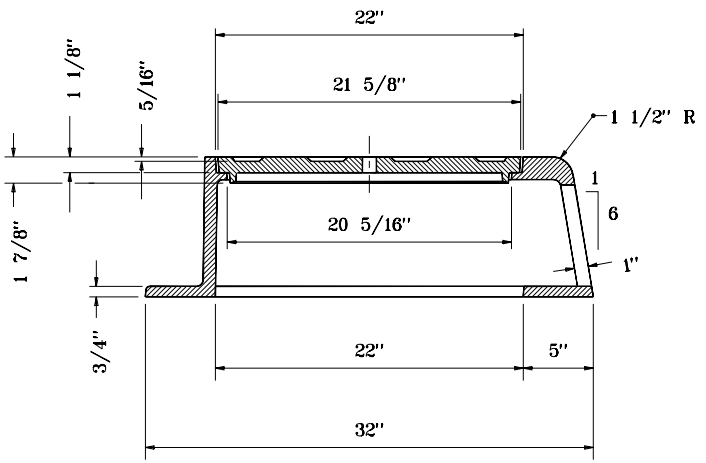

SECTION A-A

CURB CASTING TYPE 3

INDIANA DEPARTMENT OF TRANSPORTATION

CURB INLET CASTING TYPE 3

SEPTEMBER 1998

STANDARD DRAWING NO. **E 720-INCA-02**

ANTHONY L. UREMOVICH REGISTERED No. 18095 STATE OF INDIANA PROFESSIONAL ENGINEER

DESIGN STANDARDS ENGINEER

DETAILS PLACED IN THIS FORMAT	11-15-99
/s/ Anthony L. Uremovich DESIGN STANDARDS ENGINEER	11-15-99 DATE
/s/ Firooz Zandi CHIEF HIGHWAY ENGINEER	11-15-99 DATE
ORIGINALLY APPROVED	9-01-98