GENERAL NOTES

1. Brick, block, or concrete may be used.

(2) T = 8" for brick structure
T = 6" for segmental block structure

(3) In special cases or where inlet pipe is required, A_1, B_1, A_2, and B_2 shall be increased or decreased 1'-0, as directed.

(4) 2" pipe drain from bottom of curb to inlet. Aggregate to be placed around inlet end of pipe.

(5) 3". dia. pipe to be kept open for drainage of subgrade or base until surface is placed.

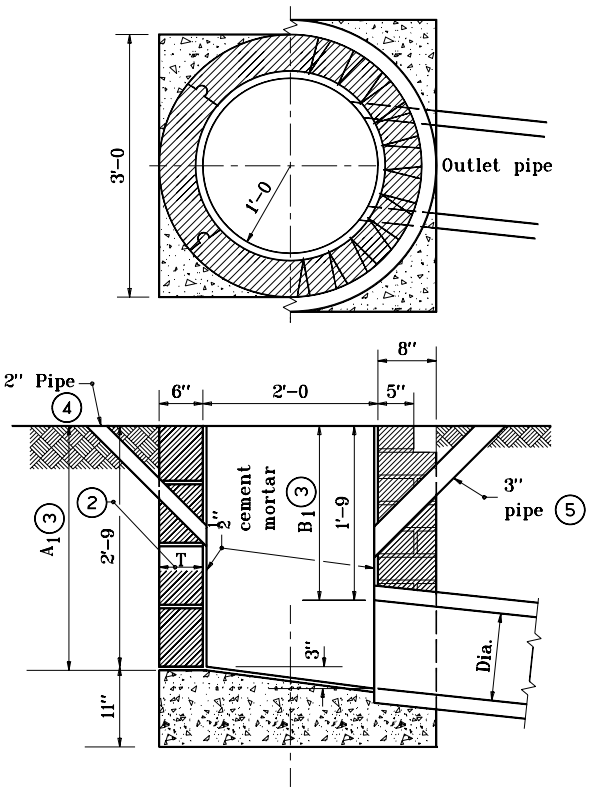

BRICK OR BLOCK

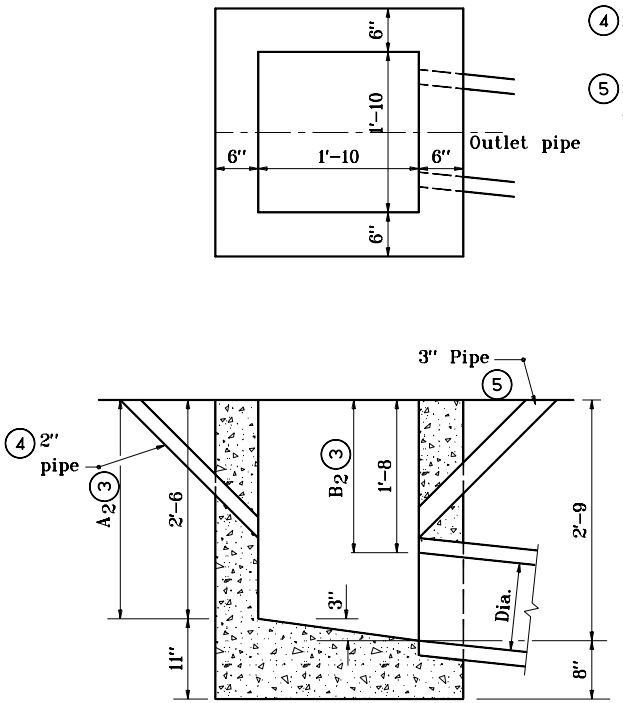

CONCRETE

INDIANA DEPARTMENT OF TRANSPORTATION

INLET TYPE A

APRIL 1995

STANDARD DRAWING NO. E 720-INST-01

ANTHONY L. UREMOVICH REGISTERED No. 18095 STATE OF INDIANA PROFESSIONAL ENGINEER

DESIGN STANDARDS ENGINEER

DETAILS PLACED IN THIS FORMAT	11-15-99
/s/ Anthony L. Uremovich DESIGN STANDARDS ENGINEER	11-15-99 DATE
/s/ Firooz Zandi CHIEF HIGHWAY ENGINEER	11-15-99 DATE
ORIGINALLY APPROVED	4-03-95

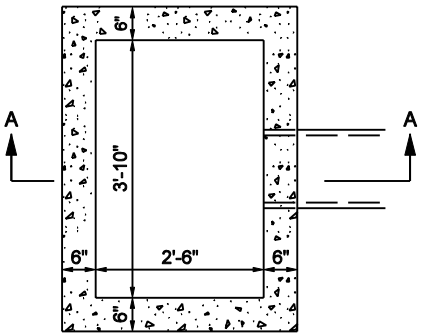

PLAN

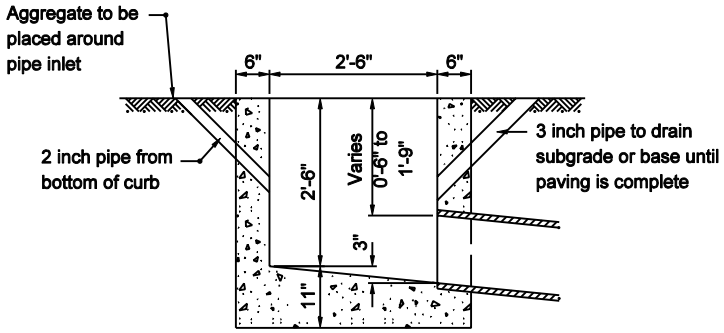

SECTION A-A

INLET-TYPE B

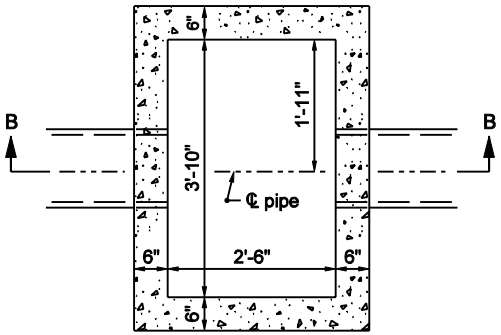

PLAN

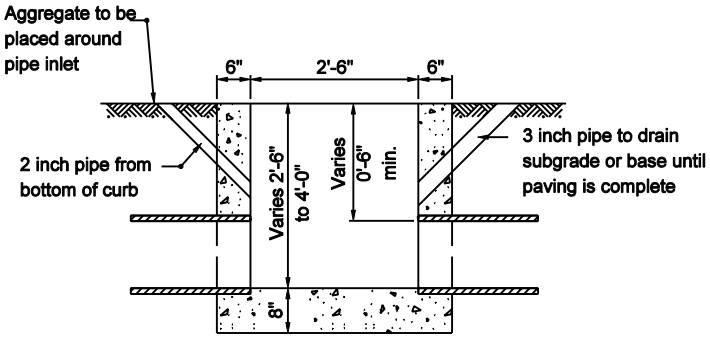

SECTION B-B

INLET-TYPE C

INDIANA DEPARTMENT OF TRANSPORTATION

INLETS TYPE B AND C

SEPTEMBER 2003

STANDARD DRAWING NO. E 720-INST-02

RICHARD L. VanCLEAVE REGISTERED No. 9750 STATE OF INDIANA PROFESSIONAL ENGINEER

DESIGN STANDARDS ENGINEER

/s/ Richard L. VanCleave 9-02-03
DESIGN STANDARDS ENGINEER DATE

/s/ Richard K. Smutzer 9-02-03
CHIEF HIGHWAY ENGINEER DATE

GENERAL NOTES

(1) If inlet pipe is required, this dimension shall be increased or decreased 1'-0 as directed.

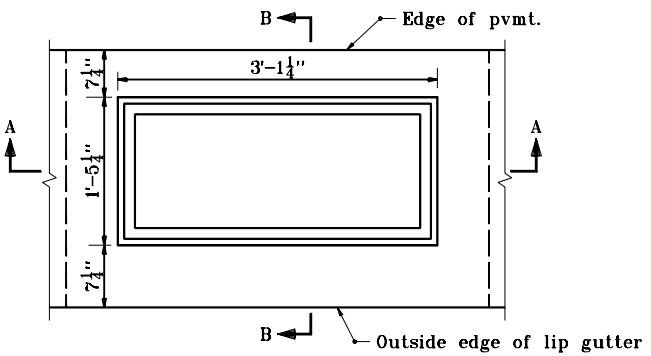

PLAN

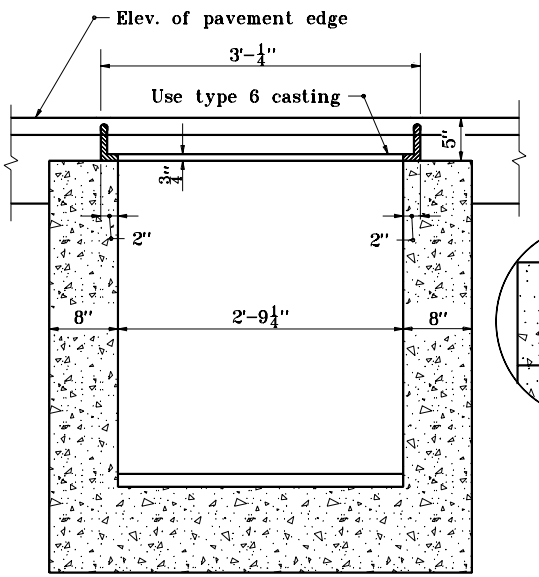

SECTION A-A

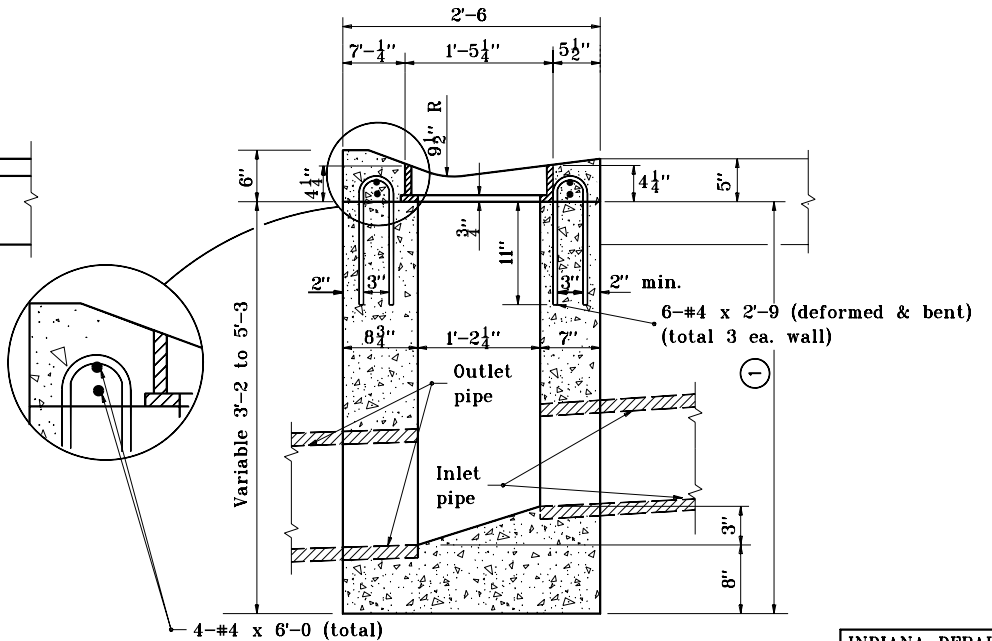

SECTION B-B

INDIANA DEPARTMENT OF TRANSPORTATION

INLET TYPE D

SEPTEMBER 1997

STANDARD DRAWING NO. E 720-INST-03

ANTHONY L. URENOVICH REGISTERED No. 18095 STATE OF INDIANA PROFESSIONAL ENGINEER

DESIGN STANDARDS ENGINEER

DETAILS PLACED IN THIS FORMAT	11-15-99
/s/ Anthony L. Uremovich DESIGN STANDARDS ENGINEER	11-15-99 DATE
/s/ Firooz Zandi CHIEF HIGHWAY ENGINEER	11-15-99 DATE
ORIGINALLY APPROVED	9-01-97

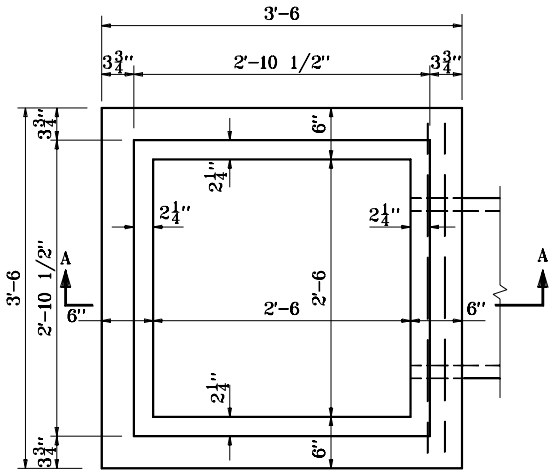

PLAN

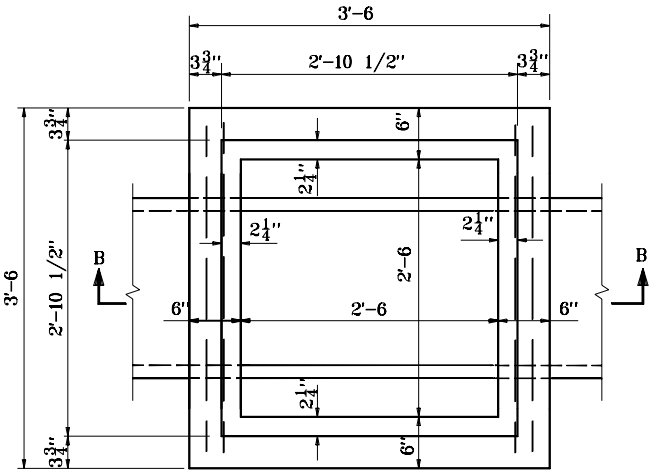

PLAN

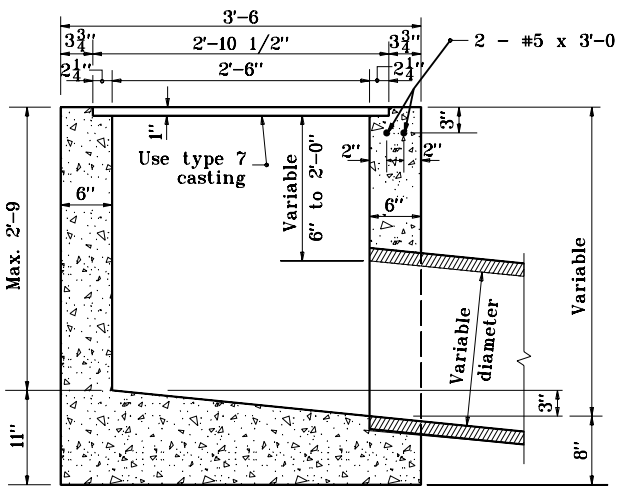

SECTION A-A

INLET TYPE E (CONC.)

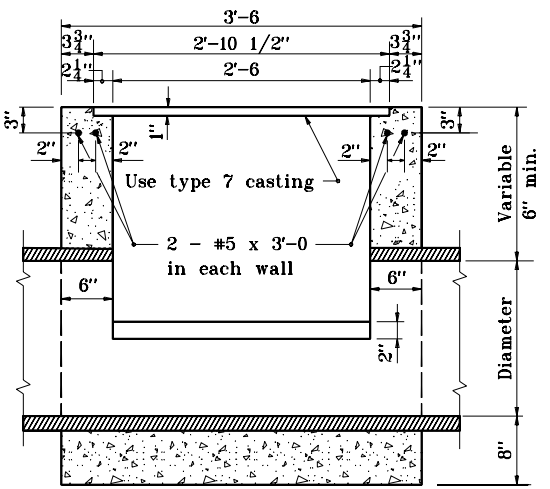

SECTION B-B

INLET TYPE F (CONC.)

INDIANA DEPARTMENT OF TRANSPORTATION

INLETS TYPE E AND F

SEPTEMBER 1997

STANDARD DRAWING NO. **E 720-INST-04**

ANTHONY L. UREMOVICH REGISTERED No. 18095 STATE OF INDIANA PROFESSIONAL ENGINEER

DESIGN STANDARDS ENGINEER

DETAILS PLACED IN THIS FORMAT	11-15-99
/s/ Anthony L. Uremovich DESIGN STANDARDS ENGINEER	11-15-99 DATE
/s/ Firooz Zandi CHIEF HIGHWAY ENGINEER	11-15-99 DATE
ORIGINALLY APPROVED	9-02-97

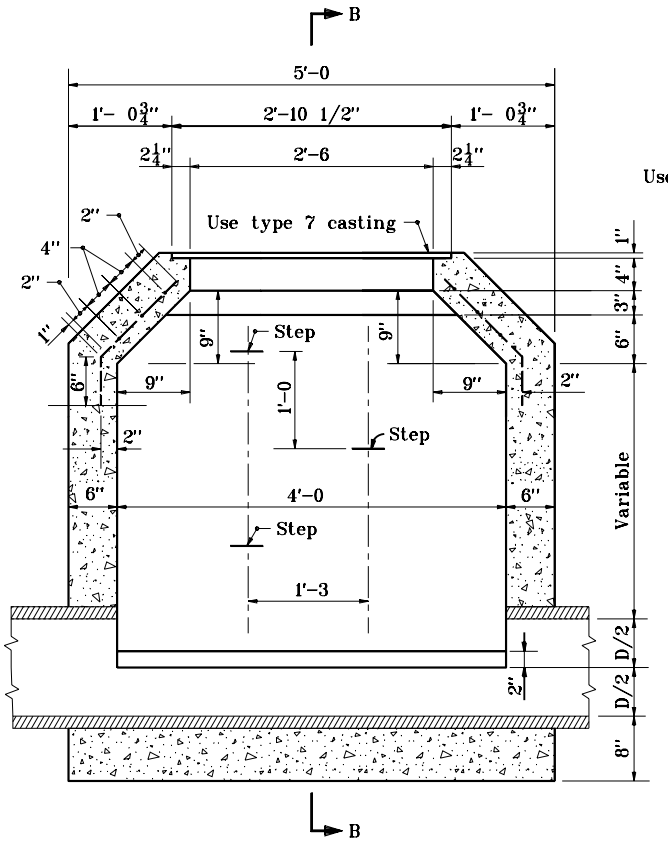

SECTION A-A

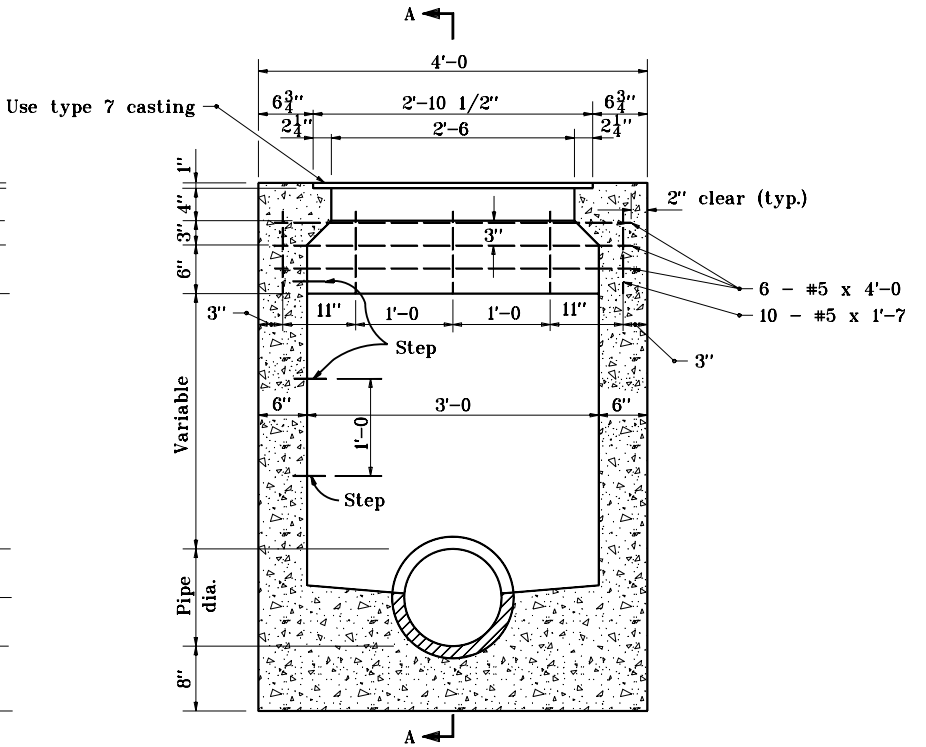

SECTION B-B

INDIANA DEPARTMENT OF TRANSPORTATION

INLET TYPE G

SEPTEMBER 1997

STANDARD DRAWING NO. E 720-INST-05

ANTHONY L. UREMOVICH REGISTERED No. 18095 STATE OF INDIANA PROFESSIONAL ENGINEER

DESIGN STANDARDS ENGINEER

DETAILS PLACED IN THIS FORMAT	11-15-99
/s/ Anthony L. Uremovich DESIGN STANDARDS ENGINEER	11-15-99 DATE
/s/ Firooz Zandi CHIEF HIGHWAY ENGINEER	11-15-99 DATE
ORIGINALLY APPROVED	9-01-97

GENERAL NOTES

1. Brick, block, or concrete may be used.
2. T = 8" for brick structure
   T = 6" for segmental block structure
3. If inlet pipe is required, A_1, B_1, A_2, and B_2 shall be increased or decreased 1'-0", as directed
4. 2" pipe drain from bottom of curb to inlet. Aggregate to be placed around inlet end of pipe.
5. 3" min. dia. pipe to be kept open for drainage of subgrade or base until surface is placed.

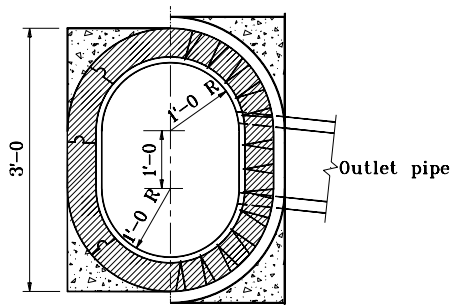

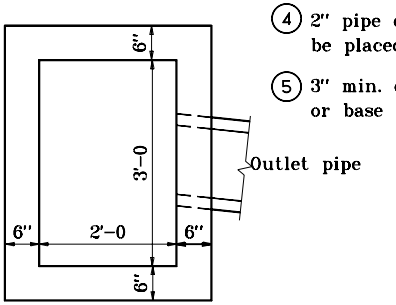

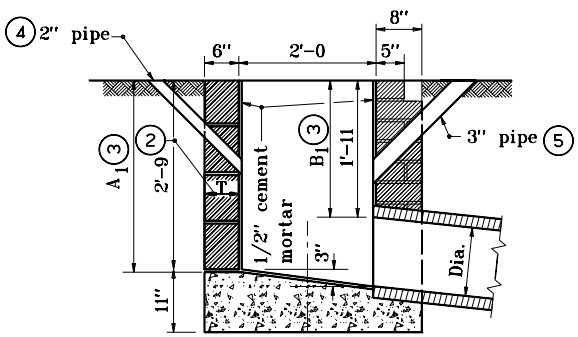

BRICK OR BLOCK

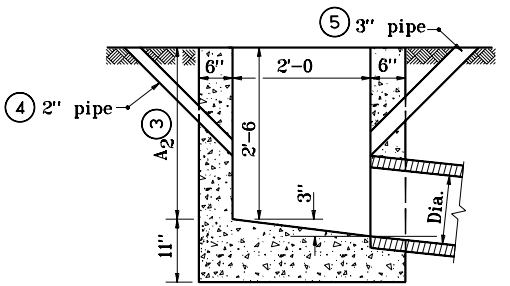

CONCRETE

INDIANA DEPARTMENT OF TRANSPORTATION

INLET TYPE J

APRIL 1995

STANDARD DRAWING NO. **E 720-INST-06**

ANTHONY L. UREMOVICH REGISTERED No. 18095 STATE OF INDIANA PROFESSIONAL ENGINEER

DESIGN STANDARDS ENGINEER

DETAILS PLACED IN THIS FORMAT	11-15-99
/s/ Anthony L. Uremovich DESIGN STANDARDS ENGINEER	11-15-99 DATE
/s/ Firooz Zandi CHIEF HIGHWAY ENGINEER	11-15-99 DATE
ORIGINALLY APPROVED	4-03-95

GENERAL NOTES

1. If inlet pipe is required, A_1 and B_1 shall be increased or decreased 1'-0 as directed.
2. 2" dia. pipe drain from bottom of curb to inlet. Aggregate to be placed around inlet end of pipe.
3. 3" min. dia. pipe to be kept open for drainage of subgrade or base until surface is placed.

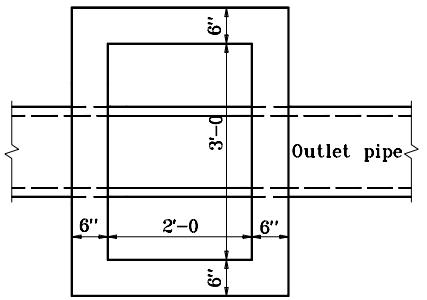

PLAN

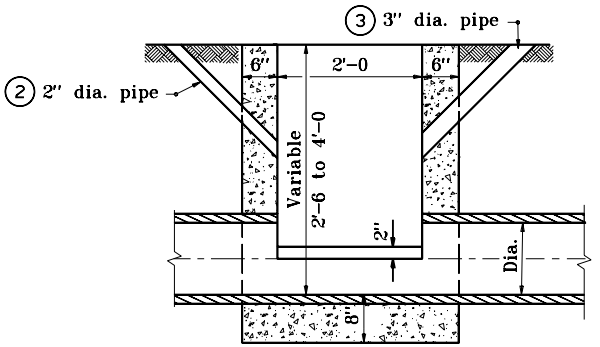

SECTION

INLET TYPE M (CONC.)

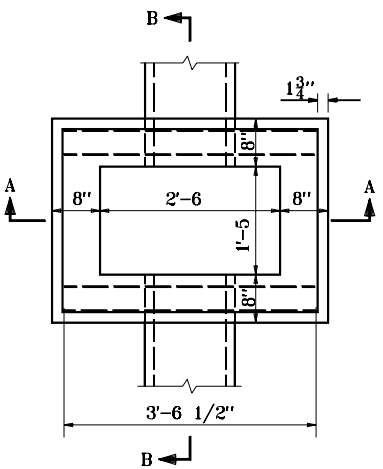

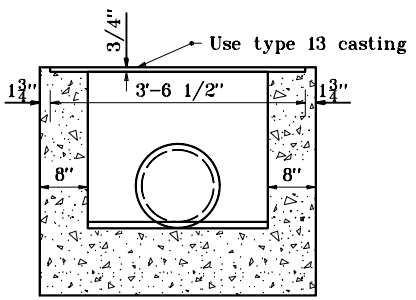

SECTION A-A

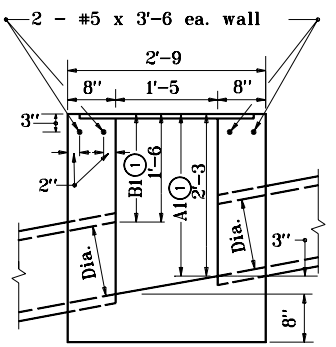

SECTION B-B

INLET TYPE R (CONC.)

INDIANA DEPARTMENT OF TRANSPORTATION

INLETS TYPE M AND R

SEPTEMBER 1997

STANDARD DRAWING NO. E 720-INST-07

ANTHONY L. UREMOVICH REGISTERED No. 18095 STATE OF INDIANA PROFESSIONAL ENGINEER

DESIGN STANDARDS ENGINEER

DETAILS PLACED IN THIS FORMAT	11-15-99
/s/ Anthony L. Uremovich DESIGN STANDARDS ENGINEER	11-15-99 DATE
/s/ Firooz Zandi CHIEF HIGHWAY ENGINEER	11-15-99 DATE
ORIGINALLY APPROVED	9-01-97

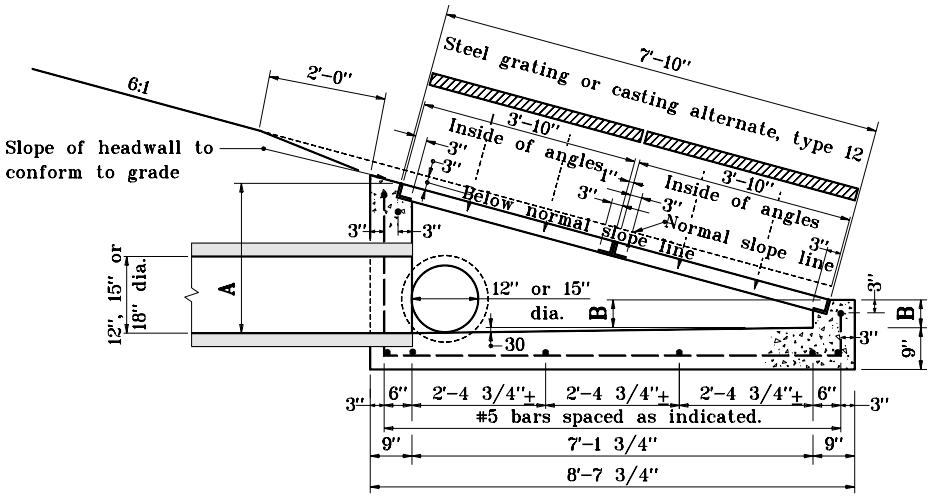

SECTION A-A

Showing Grate Slope of 6:1

TYPE N INLET						
PIPE	6:1		8:1		10:1	
SIZE	A	B	A	B	A	B
12"	21 1/2"	5"	21 1/2"	8 7/8"	21 1/2"	11 1/8"
15"	24 3/4"	8 1/4"	24 3/4"	12 1/8"	24 3/4"	14 3/8"
18"	28"	11 1/2"	28"	15 3/8"	28"	17 5/8"

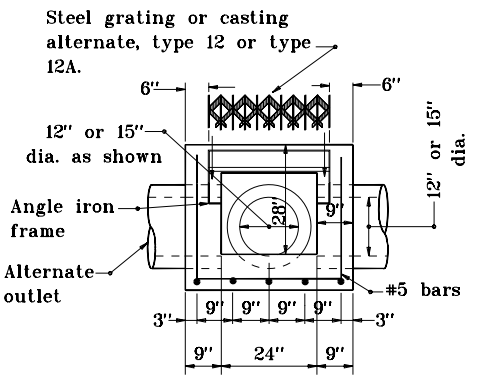

SECTION B-B

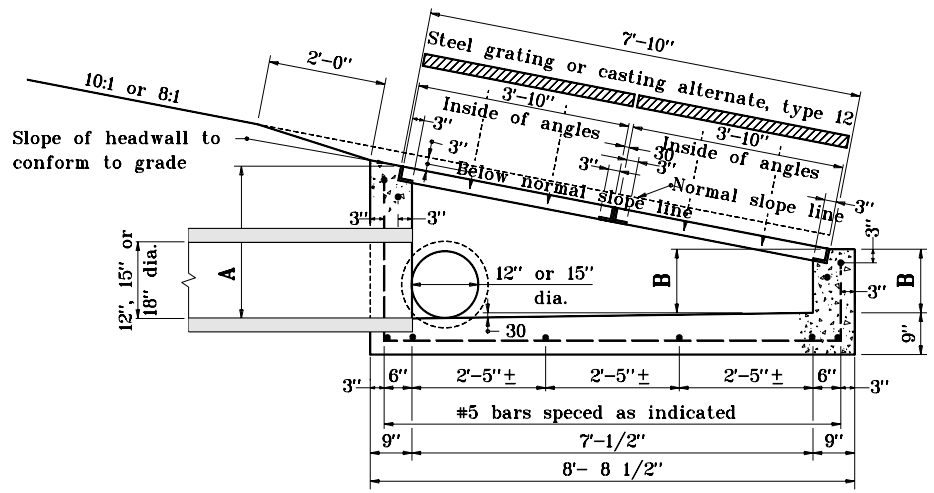

SECTION A-A

Showing Grate Slope of 8:1 or 10:1

INDIANA DEPARTMENT OF TRANSPORTATION

INLET TYPE N

MAY 1998

STANDARD DRAWING NO. **E 720-INST-08**

ANTHONY L. UREMOVICH REGISTERED No. 18095 STATE OF INDIANA PROFESSIONAL ENGINEER

DESIGN STANDARDS ENGINEER

DETAILS PLACED IN THIS FORMAT 11-15-99

/s/ Anthony L. Uremovich 11-15-99
DESIGN STANDARDS ENGINEER DATE

/s/ Firooz Zandi 11-15-99
CHIEF HIGHWAY ENGINEER DATE

ORIGINALLY APPROVED 5-01-98

GENERAL NOTES

1. See Standard Drawing E 720-INST-08 for Section B-B.

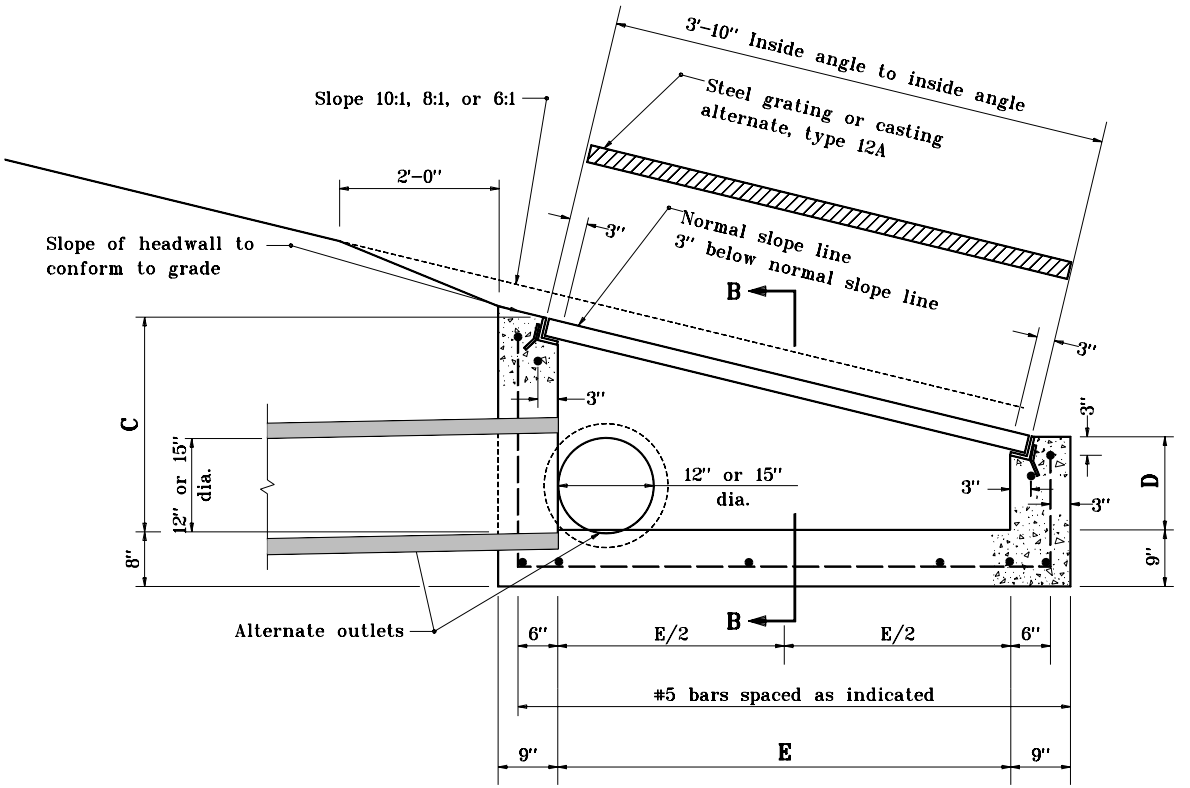

TYPE P INLET

TYPE P INLET									
PIPE SIZE	6:1			8:1			10:1		
	C	D	E	C	D	E	C	D	E
12"	21 1/2"	13"	3'-3 1/4"	21 1/2"	14 1/2"	3'-3 3/4"	21 1/2"	15 7/8"	3'-3 3/4"
15"	21 3/4"	16 1/4"	3'-3 1/4"	24 3/4"	18"	3'-3 3/4"	24 3/4"	19 1/8"	3'-3 3/4"

INDIANA DEPARTMENT OF TRANSPORTATION

INLET TYPE P

MAY 1998

STANDARD DRAWING NO. E 720-INST-09

ANTHONY L. UREMOVICH REGISTERED No. 18095 STATE OF INDIANA PROFESSIONAL ENGINEER

DESIGN STANDARDS ENGINEER

DETAILS PLACED IN THIS FORMAT 11-15-99

/s/ Anthony L. Uremovich 11-15-99
DESIGN STANDARDS ENGINEER DATE

/s/ Firooz Zandi 11-15-99
CHIEF HIGHWAY ENGINEER DATE

ORIGINALLY APPROVED 5-01-98

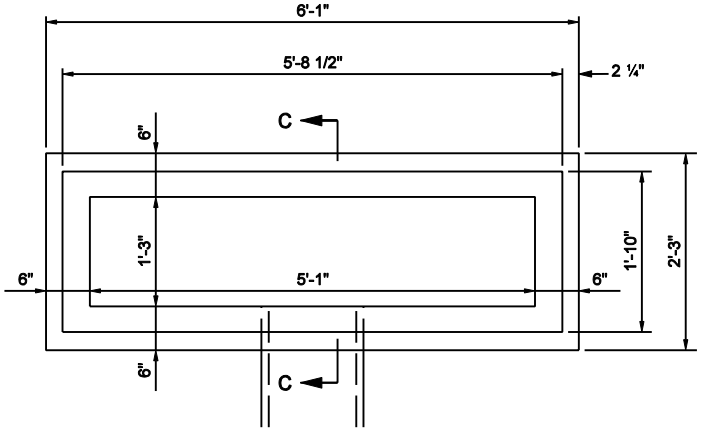

PLAN

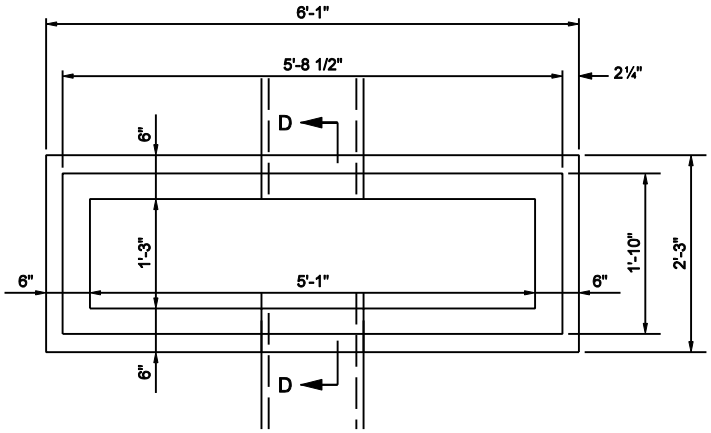

PLAN

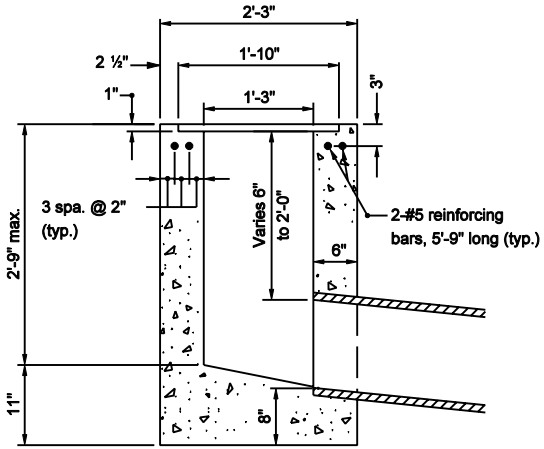

SECTION C-C

TYPE S

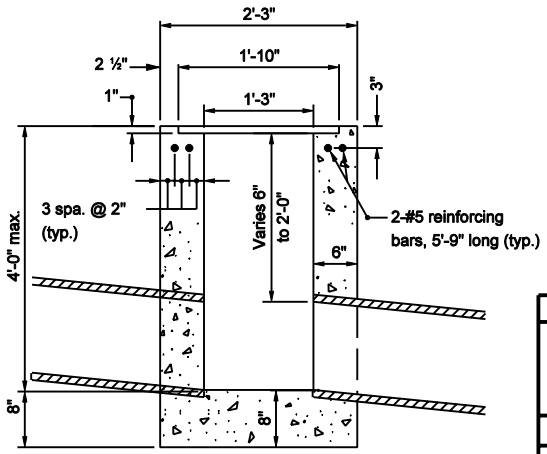

SECTION D-D

TYPE T

INDIANA DEPARTMENT OF TRANSPORTATION

INLETS TYPE S AND T

SEPTEMBER 2003

STANDARD DRAWING NO. E 720-INST-10

RICHARD L. VANCLEAVE REGISTERED No. 9750 STATE OF INDIANA PROFESSIONAL ENGINEER

DESIGN STANDARDS ENGINEER

/s/ Richard L. VanCleave 9-02-03
DESIGN STANDARDS ENGINEER DATE

/s/ Richard K. Smutzer 9-02-03
CHIEF HIGHWAY ENGINEER DATE