CITY OF BATESVILLE
DEVELOPMENT & CONSTRUCTION
STANDARDS MANUAL

CHAPTER 3
STORMWATER SPECIFICATIONS

TABLE OF CONTENTS

Section	*Subject*	*Page*
3.1	GENERAL	3-1
3.1.1	Permitting	3-1
3.1.2	References	
3.2	DESIGN CRITERIA	3-2
3.2.1	Stormwater Control Policy	3-2
3.2.2	Definitions	3-3
3.2.3	Determination of Runoff Quantities	3-7
3.2.4	Amount of Runoff to be Accommodated by Various Parts of the Drainage Facility	3-12
3.2.5	Storm Sewer Design Standards	3-13
3.2.6	Open Channel Design Standards	3-14
3.2.7	Construction and Materials	3-19
3.2.8	Stormwater Detention	3-21
3.2.9	Change in Plan	3-28
3.2.10	Determination of Impact Drainage Areas	3-28
3.2.11	Disclaimer of Liability	3-29
3.3	MATERIAL SPECIFICATIONS	3-29
3.3.1	Sewer Pipe	3-29
3.3.2	Pipe Materials	3-30
3.3.3	Manholes, Catch Basins and Inlets (Structures)	3-31
3.3.4	Joints, Fittings and Appurtenances	3-32
3.4	CONSTRUCTION REQUIREMENTS	3-32
3.4.1	Surface Conditions	3-32
3.4.2	Field Measurements, Surveys Lines, Reference Points & Grades	3-33
3.4.3	Installation of Pipe	3-33
3.4.4	General Trenching	3-37
3.4.5	Removal of Material	3-38

Section	*Subject*	*Page*
3.4.6	Stabilization	3-38
3.4.7	Backfilling	3-38
3.4.8	Compaction Testing	3-40
3.4.9	Installation of Manholes, Catch Basins & Inlets (Structures)	3-41
3.4.10	Grade Adjustment of Existing Structures	3-43
3.4.11	Record Drawings	3-43

LIST OF TABLES

Table		*Page*
3-1	Urban Runoff Coefficients	3-9
3-1a	Rural Runoff Coefficients	3-10
3-2	Runoff Coefficients “C” by Land Use and Typical Inlet Times	3-11
3-3	Typical Values of Manning’s (n) Roughness Coefficient	3-16
3-4	Maximum Permissible Velocities in Vegetal-Lined Channels*	3-20
3-5	Rainfall Intensities for Various Return Periods and Storm Durations for Intensity (inches per hour)	3-23

LIST OF DRAWINGS

Title	*Drawing No.*
Flexible Sewer Pipe Bedding Detail (Class I & II)	BB-1
Rigid Pipe Bedding Detail "Class A"	BB-2
Rigid Pipe Bedding Detail "Class B"	BB-3
Rigid Pipe Bedding Detail "Class C"	BB-4
Backfill Requirements (within R/W for Improved Streets)	BB-5
Backfill Requirements (For Crossing R/W for Improved Streets)	BB-6
Metal Flared End Section	M-1
Concrete Flared End Section	M-2
Grass Swale	M-3
INDOT Metal Pipe End Section	E 715-MPES-01
INDOT Metal Pipe Arch End Section	E 715-MPES-02
INDOT Metal Pipe End Section Connections	E 715-MPES-03
INDOT Precast Concrete End Section	E 715-PCES-01
INDOT Slotted Drain Pipe	E 715-SLDR-01
INDOT Slotted Drain Pipe	E 715-SLDR-02
INDOT Slotted Vane Drain Pipe	E 715-SLDR-03
INDOT Pipe Catch Basin Casting	E 720-CBCA-01
INDOT Catch Basin Type A	E 720-CBST-01
INDOT Catch Basin Type D	E 720-CBST-02
INDOT Catch Basin Type E	E 720-CBST-03
INDOT Catch Basin Type J	E 720-CBST-04
INDOT Catch Basin Type K	E 720-CBST-05
INDOT Catch Basin Pipe	E 720-CBST-06
INDOT Catch Basin Type S	E 720-CBST-07

LIST OF DRAWINGS (cont'd)

Title	*Drawing No.*
INDOT Catch Basin Type W	E 720-CBST-08
INDOT Catch Basin Hood	E 720-CBST-09
INDOT Compatibility of Drainage Structures and Castings	E 720-CDSC-01
INDOT Earth Ditch Casting Type 7	E 720-EDCA-01
INDOT Casting Type 5 Frame	E 720-ICCA-01
INDOT Casting Type 5 Alternate Bolted Frame	E 720-ICCA-02
INDOT Casting Type 5 (Alternate) Frame and Grate	E 720-ICCA-03
INDOT Casting Type 8 Frame	E 720-ICCA-04
INDOT Casting Type 8 Grate	E 720-ICCA-05
INDOT Casting Type 8 Curb Box	E 720-ICCA-06
INDOT Casting Type 10 Frame	E 720-ICCA-08
INDOT Casting Type 10 Grate	E 720-ICCA-09
INDOT Casting Type 10 Curb Box	E 720-ICCA-09A
INDOT Steel Grating Type 12 Frame and Grate	E 720-ICCA-10
INDOT Casting Type 12 (Alternate) Frame and Grate	E 720-ICCA-11
INDOT Steel Grating Type 12A Frame and Grate	E 720-ICCA-12
INDOT Casting Type 13 Frame and Grate	E 720-ICCA-13
INDOT Casting Type 14 Frame and Grate	E 720-ICCA-15
INDOT Casting Type 15 Frame and Grate	E 720-ICCA-16
INDOT Casting Type 15 Grate	E 720-ICCA-17
INDOT Casting Type 15 Curb Box	E 720-ICCA-18
INDOT Casting Type 15 (Alternate) Frame, Grate and Curb Box	E 720-ICCA-19
INDOT Inlet Casting Type 6	E 720-INCA-01
INDOT Curb Inlet Casting Type 3	E 720-INCA-02
INDOT Inlet Type A	E 720-INST-01
INDOT Inlets Type B and C	E 720-INST-02
INDOT Inlet Type D	E 720-INST-03
INDOT Inlets Type E and F	E 720-INST-04
INDOT Inlet Type G	E 720-INST-05
INDOT Inlet Type J	E 720-INST-06
INDOT Inlets Type M and R	E 720-INST-07
INDOT Inlet Type N	E 720-INST-08
INDOT Inlet Type P	E 720-INST-09
INDOT Inlets Type S and T	E 720-INST-10
INDOT Flat Top Grate Casting Type 2	E 720-MHCA-01
INDOT Manhole Casting Type 4 Ring and Cover	E 720-MHCA-02
INDOT Manhole Casting Type 4 Alternate Cover	E 720-MHCA-03
INDOT Manholes Type A and B	E 720-MHST-01
INDOT Manhole Type C	E 720-MHST-02
INDOT Manholes Drop Manhole Type C	E 720-MHST-03
INDOT Manholes Type D, E, F and G	E 720-MHST-04
INDOT Manholes Type H, J, K, L, M and N	E 720-MHST-05
INDOT Precast Concrete Manhole Sections	E 720-MHST-06
INDOT Precast Concrete Manhole Bottom Section	E 720-MHST-07
INDOT Manhole Bars and Concentric Cone	E 720-MHST-08
INDOT Manhole Step	E 720-MHST-09
INDOT Table of Reinforcing Steel for Manholes	E 720-MHST-10
INDOT Slotted Drain Pipe Cleanout Port	E 720-SDCP-01

LIST OF DRAWINGS (cont'd)

Title	*Drawing No.*
INDOT Casting Type I Frame and Grate	E 720-SDCP-02
INDOT Casting Type II Frame and Grate	E 720-SDCP-03

SECTION 3.1: GENERAL

3.1.1 Permitting shall be per the requirements of Chapter 6.

3.1.2 References

A. AASHTO M170 - Reinforced Concrete Culvert, Storm Drain, and Sewer Pipe

B. AASHTO M294 - Corrugated Polyethylene Pipe, 300 to 1200 mm Diameter

C. ASTM A48 - Standard Specification for Gray Iron Castings

D. ASTM A536 - Standard Specification for Ductile Iron Castings

E. ASTM C76 - Standard Specification for Reinforced Concrete Culvert, Storm Drain, and Sewer Pipe

F. ASTM C361 - Standard Specification for Reinforced Concrete Low-Head Pressure Pipe

G. ASTM C443 - Standard Specification for Joints for Concrete Pipe and Manholes, Using Rubber Gaskets

H. ASTM C478 - Standard Specification for Precast Reinforced Concrete Manhole Sections

I. ASTM D1556 - Standard Test Method for Density and Unit Weight of Soil in Place by the Sand-Cone Method

J. ASTM D1782 - Standard Test Methods for Operating Performance of Particulate Cation-Exchange Materials

K. ASTM D2167 - Standard Test Method for Density and Unit Weight of Soil in Place by the Rubber Balloon Method

L. ASTM D2321 - Standard Practice for Underground Installation of Thermoplastic Pipe for Sewers and Other Gravity-Flow Applications

M. ASTM D2922 - Standard Test Methods for Density of Soil and Soil-Aggregate in Place by Nuclear Methods (Shallow Depth)

N. ASTM D3017 - Standard Test Method for Water Content of Soil and Rock in Place by Nuclear Methods (Shallow Depth)

O. ASTM D3034 - Standard Specification for Type PSM Poly(Vinyl Chloride) (PVC) Sewer Pipe and Fittings.

P. ASTM D3212 - Standard Specification for Joints for Drain and Sewer Plastic

Pipes Using Flexible Elastomeric Seals

Q. ASTM F477 - Standard Specification for Elastomeric Seals (Gaskets) for Joining Plastic Pipe

R. ASTM F679 - Standard Specification for Poly(Vinyl Chloride) (PVC) Large-Diameter Plastic Gravity Sewer Pipe and Fittings

S. ASTM F794 - Standard Specification for Poly(Vinyl Chloride) (PVC) Profile Gravity Sewer Pipe and Fittings Based on Controlled Inside Diameter

T. ILLUDAS - Terstriep, M.L., and J.B. Stall, The Illinois Urban Drainage Area Simulator, Bulletin 58, Illinois State Water Survey, Urbana, 1974

U. Indiana Design Manual - Published by the Indiana Department of Transportation

V. TR-20 -Technical Release 20 Computer Program for Project Formulation Hydrology, Natural Resource Conservation Service, 1992

W. TR-55 - Technical Release 55 Urban Hydrology for Small Watersheds, Natural Resource Conservation Service, 1986

SECTION 3.2 DESIGN CRITERIA

3.2.1 STORMWATER CONTROL POLICY

It is recognized that the smaller streams and drainage channels serving the City of Batesville may not have sufficient capacity to receive and convey stormwater runoff resulting from continued urbanization. Accordingly, the storage and controlled release rate may be required for any development, redevelopment, and new construction located within the City.

Possible exceptions to the requirements are minor subdivision and parcelization as described in the Subdivision Control Ordinance. The City, after thorough investigation and evaluation, may waive the requirements of controlled runoff for minor subdivision and parcelization.

The release rate of stormwater from development, redevelopment, and new construction may not exceed the stormwater runoff from the land area in its present state of development. The developer must submit to the City detailed computations of runoff before and after development, redevelopment, or new construction, which demonstrate that runoff will not be increased.

These computations must show that the peak runoff rate after development for the 100-year return period storm of critical duration must not exceed the 10-year return period pre-development peak runoff rate. The critical duration storm is

that storm duration that requires the greatest detention storage.

Computations for areas up to and including 200 acres may be based on the Rational Method; typical runoff coefficients are listed herein. For areas larger than 200 acres, hydrograph techniques and/or computer drainage modeling methods may be used. Hydrograph techniques and computer modeling methods used to determine stormwater runoff shall be proven methods, subject to approval of the City.

The City, or other governmental unit will not accept any responsibility for liability and maintenance of detention/retention facilities.

3.2.2 DEFINITIONS

For the purpose of this chapter, the following definitions shall apply:

A. Capacity of a storm drainage facility: the maximum flow that can be conveyed or stored by a storm drainage facility without causing damage to public or private property.

B. Channel: a natural or artificial watercourse which periodically or continuously contains moving water, or which forms a connecting link between two bodies of water. It has a defined bed and banks which serve to confine the water.

C. City: The City of Batesville, Indiana. Also any employee or representative to whom they shall specifically delegate this responsibility.

D. Compensatory Storage: an artificial volume of storage within a flood plain used to balance the loss of natural flood storage capacity when artificial fill or structures are placed within the flood plain.

E. Contiguous: adjoining or in actual contact with.

F. Critical Duration Storm: The storm duration that requires the greatest detention storage for a given return period.

G. Culvert: a closed conduit used for the passage of surface drainage water under a roadway, railroad canal, or other impediment.

H. Dam: an earthen, concrete, or other material constructed to hold back or control the level of water.

I. Detention Basin: a facility constructed or modified to restrict the flow of stormwater to a prescribed maximum rate, and to detain concurrently the excess waters that accumulate behind the outlet.

J. Detention Storage: the temporary detaining or storage of stormwater in storage basins, on rooftops, in streets, parking lots, school yards, parks,

open spaces, or other areas under predetermined and controlled conditions, with the rate of drainage therefrom regulated by appropriately installed devices.

K. Drainage Area: the area from which water is carried off by a drainage system; a watershed, or catchment area.

L. Drop Manhole: a manhole having a vertical drop pipe connecting the inlet pipe to the outlet pipe. The vertical drop pipe shall be located immediately outside the manhole. Inside drop pipes may be allowed under special circumstances and only with prior approval.

M. Dry Bottom Detention Basin: a basin designed to be completely dewatered after having provided its planned detention of runoff during a storm event.

N. Duration: the time period of a rainfall event.

O. Erosion: wearing away of the land by running water, waves, temperature changes, ice, or wind.

P. Flood Elevation: the elevation at all locations delineating the maximum level of high waters for a flood of given return period and rainfall duration.

Q. Flood or Flood Waters: the water of any watercourse which is above the banks of the watercourse.

R. Flood Hazard Area: any flood plain, floodway, floodway fringe, or any combination thereof which is subject to inundation by the regulatory flood; or any flood plain as delineated by Zone A on a FEMA Flood Hazard Boundary Map.

S. Flood Plain: the area adjoining the river or stream which had been or may hereafter be covered by floodwaters.

T. Flood Protection Grade: the elevation of the lowest floor of a building. If a basement is included, the basement floor is considered the lowest floor.

U. Floodway: SEE Regulatory Flood.

V. Floodway Fringe: that portion of the flood plain lying outside the floodway, which is inundated by the regulatory flood.

W. Footing Drain: a drain pipe installed around the exterior of a basement wall foundation to relieve water pressure caused by high groundwater elevation.

X. Grade: the inclination or slope of a channel, canal, conduit, etc., or natural ground surface usually expressed in terms of the percentage the vertical rise (or fall) bears to the corresponding horizontal distance.

Y. Impact Areas: areas defined and mapped by the City which are unlikely to be easily drained because of one or more factors.

Z. Impervious: a term applied to material through which water cannot pass, or through which water passes with difficulty.

AA. Inlet: an opening into a storm sewer system for the entrance of surface stormwater runoff, more completely described as a storm sewer inlet.

BB. Junction Chamber: a converging section of conduit, usually large enough for a person to enter, used to facilitate the flow from one or more conduits into a main conduit.

CC. Lateral Storm Sewer: a sewer that has inlets connected to it but has no other storm sewer connected.

DD. Manhole: storm sewer structure through which a person may enter to gain access to an underground storm sewer or enclosed structure.

EE. Major Drainage System: drainage system carrying runoff from an area of one or more square miles.

FF. Minor Drainage System: drainage system having an area of less than one square mile.

GG. Off-Site: everything not on site.

HH. On-Site: located within the controlled area where runoff originates.

II. Outfall: the point or location where storm runoff discharges from a sewer or drain. Also applied to the outfall sewer or channel which carries the storm runoff to the point or outfall.

JJ. Peak Flow: the maximum rate of flow of water at a given point in a channel or conduit resulting from a particular storm or flood.

KK. Radius of Curvature: length of radius of a circle used to define a curve.

LL.. Rainfall Intensity: the cumulative depth of rainfall occurring over a given duration, normally expressed in inches per hour.

MM. Reach: any length of river, channel, or storm sewer.

NN. Regulated Area: all of the land under the jurisdiction of the City of Batesville.

OO. Regulatory Flood: that flood having a peak discharge which can be

equaled to exceed on the average of once in a one hundred (100) year period, as calculated by a method and procedure which is acceptable to the City. If a permit from the Natural Resources Commission for construction in the floodway is required (see Section VI), then the regulatory flood peak discharge should be calculated by a method acceptable to the City and the Natural Resources Commission. This regulatory flood is equivalent to a flood having a probability of occurrence of one percent (1%) in any given year.

PP. Regulatory Floodway: the channel of a river or stream and those portions of the flood plains adjoining the channel which are reasonably required to carry and discharge the peak flow of the regulatory flood of any river or stream.

QQ. Release Rate: the amount of stormwater released from a stormwater control facility per unit of time.

RR. Return Period: the average interval of time within which a given rainfall event will be equaled or exceeded once. A flood having a return period of 100 years has a one percent probability of being equal to or exceeded in any one year.

SS. Runoff Coefficient: a decimal fraction relating the amount of rain which appears as runoff and reaches the storm drainage system to the total amount of rain falling. A coefficient of 0.5 implies that 50 percent of the rain falling on a given surface appears as stormwater runoff.

TT. Sediment: material of soil and rock origin, transported, carried, or deposited by water.

U.U. Siphon: a closed conduit or portion of which lies above the hydraulic grade line, resulting in a pressure less than atmospheric and requiring a vacuum within the conduit to start flow. A siphon utilizes atmospheric pressure to effect or increase the flow of water through a conduit.

An inverted siphon is a closed conduit used to carry stormwater flow that dips below the hydraulic grade line to avoid an obstruction such as a sanitary sewer, water main, etc.

VV. Spillway: a waterway in or about a hydraulic structure, for the escape of excess water.

WW. Stilling Basin: a basin used to slow water down or dissipate its energy.

XX. Storage Duration: the length of time that water may be stored in any stormwater control facility, computed from the time water first begins to be stored.

YY. Storm Sewer: a closed conduit for conveying collected stormwater.

ZZ. Stormwater Drainage System: all means, natural or man-made, used for conducting stormwater to, through, and from a drainage area to any of the following: conduits and appurtenant features, canals, channels, ditches, streams, culverts, streets, and pumping stations.

AAA. Stormwater Runoff: the water derived from rains falling within a tributary basin, flowing over the surface of the ground or collected in channels or conduits.

BBB. Tributary: contributing stormwater from upstream land areas.

CCC. Urbanization: the development, change, or improvement of any parcel of land consisting of one or more lots for residential, commercial, industrial, recreational, or public utility purposes.

DDD. Watercourse: any river, stream, brook, branch, natural or man-made, drainageway in or into which stormwater runoff or floodwaters flow either regularly or intermittently.

EEE. Watershed: SEE Drainage Area.

FFF. Wet Bottom Detention Area (Retention Basin): a basin designed to retain a permanent pool of water after having provided its planned detention of runoff during a storm event.

3.2.3 DETERMINATION OF RUNOFF QUANTITIES

Runoff quantities shall be computed for the area of the parcel under development, plus the area of the watershed flowing into the parcel under development. The quantity of runoff which is generated as a result of a given rainfall intensity may be calculated as follows:

A. For areas up to and including 200 acres, the Rational Method may be used. In the Rational Method, the peak rate of runoff Q, in cubic feet per second, is computed as:

$$Q = CIA$$

Where:
C = runoff coefficient, representing the characteristics of the drainage area and defined as the ratio of runoff to rainfall.

I = average intensity of rainfall in inches per hour for a duration equal to the time of concentration (tc) for a selected rainfall frequency.
A = tributary drainage area in acres.

Guidance to selection of the runoff coefficient “C” is provided by Table 3-1

and Table 3-1A that show values for different types of surface and local soil characteristics. The composite "C" value used for a given drainage area with various surface types shall be the weighted average for the total area calculated from a breakdown of individual areas having different surface types.

Table 3-2 provides runoff coefficients and inlet times for different land uses situated in an upstream area. A coefficient or coefficients shall be used for this area in its present or existing state of development.

Rainfall Intensity shall be determined from the rainfall data shown in Table 3-5. The time of concentration (tc) to be used shall be the sum of the inlet time and flow time in the drainage facility under consideration. The flow time in the storm sewers may be estimated by the distance in feet divided by velocity of flow in feet per second. The velocity shall be determined using the Manning Formula.

Inlet time is the combined time required for the runoff to reach the inlet of the storm sewer. It includes overland flow time and flow time through established surface drainage channels such as swales, ditches, and sheet flow across such areas as lawns, fields, and other graded surfaces.

B. The runoff rate for areas in excess of 200 acres shall be determined by methods described in 3.2.6, Subsection F.

TABLE 3-1

Urban Runoff Coefficients

Type of Surface	Runoff Coefficient "C"
Asphalt	0.82
Concrete	0.85
Roof	0.85
Lawns (Sandy)	
Flat (0-2% slope)	0.07
Rolling (2-7% slope)	0.12
Steep (>7% slope)	0.17
Lawns (Clay)	
Flat (0-2% slope)	0.16
Rolling (2-7% slope)	0.21
Steep (>7% slope)	0.30

The coefficients of this tabulation are applicable to storms of 5- to 10-year frequencies. Coefficients for less frequent, higher intensity storms shall be modified as follows with a maximum "C" factor of 1.0:

Return Period (years)	Multiply "C" by
25	1.1
50	1.2
100	1.25

TABLE 3-1A

Rural Runoff Coefficients

Type of Surface	Runoff Coefficient "C"
Woodland (Sandy)	
Flat (0-5% slope)	0.10
Rolling (5-10% slope)	0.25
Steep (>10% slope)	0.30
Woodland (Clay)	
Flat	0.30
Rolling	0.35
Steep	0.50
Pasture (Sandy)	
Flat	0.10
Rolling	0.16
Steep	0.22
Pasture (Clay)	
Flat	0.30
Rolling	0.36
Steep	0.42
Cultivated (Sandy)	
Flat	0.30
Rolling	0.40
Steep	0.52
Cultivated (Clay)	
Flat	0.50
Rolling	0.60
Steep	0.72

The coefficients of this tabulation are applicable to storms of 5- to 10-year frequencies. Coefficients for less frequent, higher intensity storms shall be modified as follows with a maximum "C" factor of 1.0:

Return Period (years)	Multiply "C" by
25	1.1
50	1.2
100	1.25

TABLE 3-2

Runoff Coefficients "C" by Land Use and Typical Inlet Times

LAND USE	RUNOFF COEFFICIENTS			INLET TIME (minutes)
	FLAT	ROLLING	STEEP	
Commercial (CBD)	0.75	0.83	0.91	5
Commercial (NHD)	0.54	0.60	0.66	5
Industrial	0.63	0.70	0.77	5-10
Garden Apartments	0.54	0.60	0.66	5-10
Churches	0.54	0.60	0.66	5-10
Schools	0.31	0.35	0.39	10-15
Semi-Detached Residence	0.45	0.50	0.55	10-15
Detached Residence	0.40	0.45	0.50	10-15
Quarter-Acre Lots	0.36	0.40	0.44	10-15
Half-Acre Lots	0.31	0.35	0.39	10-15
Parkland	0.18	0.20	0.22	To be determined

1. Flat Terrain = 0-2% slopes
2. Rolling Terrain = 2-7% slopes
3. Steep Terrain = 7%
4. Interpolation, extrapolation, and adjustment for local conditions shall be based on engineering experience and judgment.
5. The coefficients of this tabulation are applicable to storms of 5- to 10-year frequencies. Coefficients for less frequent, higher intensity storms shall be modified as follows with a maximum "C" factor of 1.0:

Return Period (years)	Multiply "C" by
25	1.1
50	1.2
100	1.25

3.2.4 AMOUNT OF RUNOFF TO BE ACCOMMODATED BY VARIOUS PARTS OF A DRAINAGE FACILITY

Various parts of a drainage facility must accommodate runoff water as follows:

A. The minor drainage system such as inlets, catch basins, street gutters, swales, sewers, and small channels which collect stormwater must accommodate peak runoff from a 10-year return period storm. Rainfall duration shall be equal to the time of concentration or one hour, if the time of the concentration is less than one hour. A first quartile storm distribution shall be used for computer modeling. These minimum requirements must be satisfied:

   1. The allowable spread of water on collector streets is limited to maintaining two clear 10-foot moving lanes of traffic. One lane is to be maintained on local roads, while places can have a water spread equal to one-half of their width.

   2. Open channels carrying peak flows greater than 30 cubic feet per second shall be capable of accommodating peak runoff for a 50-year return period storm within the drainage easement.

   3. Culverts shall be capable of accommodating peak runoff from a 50-year return period storm when crossing under a road which is part of the Indiana Department of Transportation rural functional classification system and are classified as principal or minor arterial, major, or minor collector roads.

B. Major drainage systems are defined as 3.2.2.EE, and shall be designed in accordance with Indiana Department of Natural Resources standards as described in Section 3.2.4.C.

C. Chapter 318 of the Acts of 1945, as amended, Sections 17 and 19, require the Natural Resources Commission approval of any construction in a floodway, and of any works for flood control. This includes bridges, dams, levees, floodwalls, wharves, piers, booms, weirs, bulkheads, jetties, groins, excavations, fills, or deposits of any kind, utility lies, or any other building, structure, or obstruction. Also, any ditch work (new construction, deepening or modification) within one-half mile of a public freshwater lake of 10 acres or more in area.

   The approval of the Natural Resources Commission, in writing, must be obtained before beginning construction. Applications for approval should be submitted to:

Indiana Department of Natural Resources
Division of Water
402 West Washington St., Room W264
Indianapolis IN 46204

All applications should be made on the standard application form provided by the Commission and should be accompanied by plans, profiles, specifications, and other data necessary for the Commission to determine the effect of the proposed construction upon the floodway and on flood control in the state.

Application made to and approval granted by the Natural Resources Commission does not in any way relieve the owner of the necessity of securing easements or other property rights, and permits and/or approvals from affected property owners and local, state, and federal agencies.

The engineering staff of the Division of Water is available to discuss and offer suggestions regarding requirements in the design of structures in floodways. High water marks have been set on many of the streams in the state, and information is available from the Division of Water on actual and/or potential flooding. Information regarding benchmarks set to Mean Sea Level Datum, General Adjustment of 1929, is available from the Division of Water, Surveying, and Mapping Section.

Applications are considered by the Commission at regular meetings usually held each month. After the application and plans have been approved by the Commission, a certificate of approval is forwarded to the applicant.

A fee is charged by the Commission for approval under the Flood Control Act unless stated otherwise in the Approval. Construction is considered to be a permanent development, and no renewals of the approval are necessary except in the cases where temporary approvals are granted for temporary construction. The right is reserved to require additional data where necessary.

3.2.5 STORM SEWER DESIGN STANDARDS

All storm sewers, whether private or public, and whether constructed on private or public property, shall conform to the design standards and other requirements contained herein.

A. Manning Equation - The hydraulic capacity of sewers shall be determined using the Manning's Equation: $v = (1.486/n) R^{2/3} S^{1/2}$. Where:

   v = mean velocity in feet per second
   R = the hydraulic radius in feet
   S = the slope of the energy grade line in feet per foot
   n = the roughness coefficient

The hydraulic radius, R, is defined as the cross-sectional area divided by the wetted flow surface or wetted perimeter. Typical “n” values and maximum permissible velocities for storm sewer materials are listed in Table 3-3. Roughness coefficient (n) values for other sewer materials can be found in standard hydraulics texts and references.

B. Minimum Size - The minimum size of all storm sewers shall be 12 inches. The rate of release for detention storage shall be controlled by an orifice plate or other devices, subject to the approval of the City, where the 12-inch pipe will not limit the rate of release as required.

C. Grade - Sewer grade shall be such that, in general, a minimum of two feet of cover is maintained over the top of the pipe. Pipe cover less than minimum may be used only upon approval of the City. Uniform slopes shall be maintained between inlets, manholes, and inlets to manholes. Final grade shall be set with the full consideration of the capacity required, sedimentation problems, and other design parameters. Minimum and maximum allowable slopes shall be those capable of producing velocities of two and one-half and fifteen feet per second, respectively, when the sewer is full flowing.

D. Alignment - Storm sewers shall be straight between manholes whenever possible. Where long radius curves are necessary to conform to street layout, the minimum radius of curvature shall be no less than one hundred feet for sewers forty-two inches and larger in diameter. Deflection of pipe sections shall not exceed the maximum deflection recommended by the pipe manufacturer. The deflection shall be uniform, and finished installation shall follow a smooth curve.

E. Manholes - Manholes shall be installed to provide access to continuous underground storm sewers for the purpose of inspection and maintenance. Manholes shall be provided at the following locations:

1. where two or more storm sewers converge

2. at the point of beginning or at the end of a curve, and at the point of reverse curvature (PC, PT, PRC)

3. where pipe size changes

4. where an abrupt change in alignment occurs

5. where a change in grade occurs

6. at suitable intervals in straight sections of sewer; the maximum distance between storm sewer manholes shall be as follows:

Size of Pipe (Inches)	Maximum Distance (feet)
12 through 42	400
48 and larger	600

F. Inlets - Inlets or drainage structures shall be utilized to collect surface water through grated openings and convey it to storm sewers, channels, or culverts. Inlet design and spacing shall be in accordance with Chapter 36, Section 10 of the Indiana Design Manual or other approved design procedure. The inlet grate opening provided must be adequate to pass the design 10-year flood with 50% of the sag inlet areas clogged. An overloaded channel from the sag inlets to the overflow channel or basin shall be provided at sag inlets, so that the maximum depth of water that might be ponded in the street sag shall not exceed 7 inches.

TABLE 3-3

Typical Values of Manning's (n) Roughness Coefficient

MATERIAL	MANNING'S (n)	DESIRABLE MAX. VELOCITIES
Closed Conduits		
Concrete	0.013	15 fps
PVC	0.011	15 fps
Ductile Iron	0.013	15 fps
Circular Corrugated Metal, Annular Corrugations (2 2/3" x 1/2")		
Unpaved	See Below	7 fps
25% Paved	0.021	7 fps
50% Paved	0.018	7 fps
100% Paved	0.013	7 fps
C.C.M.P., Helical Corrugations, 2 2/3" x 1/2" Unpaved Corrugation		
12"	0.022	7 fps
18"	0.023	7 fps
24"	0.024	7 fps
36"	0.025	7 fps
48"	0.026	7 fps
60" or larger	0.027	7 fps
Corrugated polyethylene smooth interior pipe, HDPE	0.012	15 fps
Open Channels		
Concrete, trowel finish	0.013	See Table 3-4 for all open channel velocities
Concrete, broom float	0.015	
Gunite	0.018	
Riprap, placed	0.030	
Riprap, dumped	0.035	
Gabion	0.028	
New earth (unif. sod clay)	0.025	
Existing earth (fairly uniform, some weeds)	0.030	
Dense growth of weeds	0.040	
Dense weeds and brush	0.040	
Swale with grass	0.035	

3.2.6 OPEN CHANNEL DESIGN STANDARDS

All open channels, whether private or public, and whether constructed on private or public land, shall conform to the design standards and other design requirements contained herein.

A. Manning's Equation
The waterway for channels shall be determined using Manning's Equation.

$$Q = AV = A(1.486/n)\ R^{2/3}\ S^{1/2}$$

Where:

A = waterway area of channel in square feet
Q = discharge in cubic feet per second (cfs)
V,R,S, & n = are explained in paragraph 3.2.5-A.

B. Channel Cross-Section and Grade
The required channel cross-section and grade are determined by the design capacity. A minimum depth may be required to provide adequate outlets for subsurface drains, tributary ditches, or streams. The channel grade shall be such that the velocity in the channel is high enough to prevent siltation to take place and ultimately reduce the channel cross-section. The maximum permissible velocities in vegetal-lined channels to be constructed must be considered in design of the channel section.

C. Side Slopes
Earthen channel side slopes shall be no steeper than 2 to 1. Flatter slopes may be required to prevent erosion and for ease of maintenance. Where channels will be lined, side slopes shall be no steeper than 1 ½ to 1 with adequate provisions made for weep holes. Side slopes steeper than 1 ½ to 1 may be used for lined channels, provided that the side lining and structural retaining wall are designed and constructed with provisions for live and dead load surcharge.

D. Channel Stability
1. Characteristics of a stable channel are:
   a. it neither aggrades nor degrades beyond tolerable limits
   b. the channel banks to not erode to the extent that the channel cross-section changes appreciably
   c. excessive sediment bars do not develop
   d. excessive erosion does not occur around culverts, bridges, or elsewhere
   e. gullies do not form or enlarge due to the entry of uncontrolled surface flow to the channel

2. Channel stability shall be determined for an aged condition, and the velocity shall be based on the design flow or the bank full flow, whichever is greater, using "n" values for various channel linings as shown in Table 3-3. In no case, is it necessary to check channel stability for discharges greater than that from a 100-year return period storm.

3. Channel stability must be checked for conditions immediately after construction. For this stability analysis, the velocity shall be calculated for the expected flow from a 10-year return period storm on the watershed, or the bank full flow, whichever is smaller. The "n" value for

newly constructed channels in fine-grained soils and sands may be determined in accordance with the National Engineering Handbook Section 5, Supplement B, Natural Resources Conservation Service, and shall not exceed channel 0.025.

4. The allowable velocities for newly constructed channels are shown on Table 3-4. Those velocities may be increased by a maximum of 20 percent to reflect the effects of vegetation to be established under the following conditions:
   a. the soil and site in which the channel is to be constructed are suitable for rapid establishment and support of erosion-controlling vegetation
   b. species of erosion-controlling vegetation adapted to the area and proven methods of establishment are shown
   c. the channel design includes detailed plans for establishment of vegetation on the channel side slopes.

E. Drainage of Waterways

Vegetated waterways that are subject to low flows of long duration or where wet conditions prevail shall be drained with a tile system or by other means such as paved gutters. Tile lines may be outletted through a standard tile outlet.

F. Appurtenant Structures

The design of channels will provide all structures required for the proper functioning of the channel and the laterals thereto and travelways for operation and maintenance. Recessed inlets and structures needed for entry of surface and subsurface flow into channels without significant erosion or degradation shall be included in the design of channel improvements. The design is also to provide the necessary flood gates, water level control devices, and any other appurtenance affecting the functioning of the channels and attainment of the purpose for which they are built.

The effect of channel improvements on existing culverts, bridges, buried cables, pipelines, and inlet structures for surface and subsurface drainage on the channel being improved and laterals thereto shall be evaluated to determine the need for modification or replacement. Culverts and bridges which are modified or added as part of channel improvement projects shall meet reasonable standards for the type of structure, and shall have a minimum capacity equal to the design discharge or governmental agency design requirements, whichever is greater.

G. Disposition of Spoils

Spoil material resulting from clearing, grubbing, and channel excavation shall be disposed of in such a manner which will:

1. Minimize overbank wash
2. Provide for the free flow of water between the channel and flood plain unless the valley routing and water surface profile are based on

continuous dikes being installed.

3. Not hinder the development of travelways for maintenance.
4. Leave the right-of-way in the best condition feasible, consistent with the project purposes for productive use by the owner.
5. Improve the aesthetic appearance of the site to the extent feasible.
5. Be approved by the IDNR or U.S. Army Corps of Engineers (whichever is applicable), if deposited in floodway.

3.2.7 CONSTRUCTION AND MATERIALS

A. Construction - Specifications shall be in keeping with the current standards of engineering practice and shall describe the requirements for the proper installation of the project to achieve its intended purpose.

B. Materials - Materials acceptable for use as channel lining are:
   1. Grass
   2. Revetment riprap
   3. Concrete
   4. Hand-laid riprap
   5. Pre-cast cement concrete riprap
   6. Grouted riprap
   7. Gabions
   8. Other materials as approved by the City

TABLE 3-4
Maximum Permissible Velocities in Vegetal-Lined Channels*

		Permissible Velocity[1]	
Cover	Slope Range %	Erosion Resist. Soils (fps)	Easily Eroded Soils (fps)
1. Bermuda Grass	0 - 5 5 - 10 > 10	8 7 6	6 5 4
2. Bahia Buffalo Grass Kentucky Bluegrass Smooth Brome Blue Grama	 0 - 5 5 - 10 > 10	 7 6 5	 5 4 3
3. Grass Mixtures[2] Reed Canary Grass	0 - 5 5 - 10	5 4	4 3
4. Lespediza sericea Weeping Lovegrass[3] Yellow Bluestem Red top Alfalfa Red Fescue	0 - 5	3.4	2.5
5. Common Lespediza[4,5] Sudan Grass[4]	0 - 5	3.5	2.5

1 Use velocities exceeding 5 fps only where good cover and proper maintenance can be obtained

2 Do not use on slopes steeper than 10%, except for vegetated side slopes in combination with stone, concrete, or highly resistant vegetative center section.

3 Do not use on slopes steeper than 5% except for vegetated side slopes in combination with stone, concrete, or highly resistant vegetative center section.

4 Annuals: use on mild slopes or as temporary protection until permanent covers are established.

5 Use on slopes steeper than 5% is not recommended.

*Soil Conservation Service, SCS-TP-61, Handbook of Channel Design for Soil and Water Conservation.

Other lining materials shall receive specific approval of the City. Materials shall comply with those in the latest edition of INDOT's Standard Specifications.

3.2.8 STORMWATER DETENTION

The following shall govern the design of any improvement with respect to the detention of stormwater runoff.

A. Acceptable Detention Methods
The increased stormwater runoff resulting from a proposed development should be detained on-site by the provisions of appropriate wet or dry bottom reservoirs, by storage on flat roofs, parking lots, streets, lawns, or other acceptable techniques. Measures which retard the rate of overland flow and velocity in runoff channels shall also be used to partially control the runoff rate. Detention basins shall be sized to store excess flows from storms with a 100-year return period. Control devices shall limit the discharge to a rate no greater than that prescribed by 3.2.8.E. and F.

B. Design Storm
Design of stormwater detention facilities shall be based on a return period of once in one hundred (100) years. The storage volume and outflow rate shall be sufficient to handle stormwater runoff from a critical duration storm, as defined in 3.2.8.E. and F.

Rainfall intensity-duration-frequency relationships shall be those given in Tables 3-5.

C. Allowable Release Rate
The allowable release rate of stormwater originating from a proposed development shall not exceed the amount specified in 3.2.1., Stormwater Control Policy, and as described in 3.2.8.E. and F.

In the event the natural downstream channel or storm sewer system is inadequate to accommodate the release rate provided above, then the allowable release rate shall be reduced to that rate permitted by the capacity of the receiving downstream channel or storm sewer system; and additional detention as determined by the City shall be required to store that portion of the runoff exceeding the capacity of the receiving sewers or waterways.

If more than one detention basin is involved in the development of the area upstream of the limiting restriction, the allowable release rate from any one detention basin shall be in direct proportion to the ratio of its drainage area to the drainage area of the entire watershed upstream of the restriction.

D. Drainage System Overflow Design
Drainage systems shall have adequate capacity to convey the stormwater runoff from all upstream tributary areas through the development under consideration for a storm of 100-year design return period calculated on the basis of the upstream land in its present state of development. An allowance, equivalent to the reduction in flow rate provided, shall be made for upstream detention when such upstream detention and release rate have been

previously approved by the City and evidence of its construction can be shown.

E. Determination of Storage Volume using the Rational Method
For areas of two hundred (200) acres or less: the Rational Method may be used to determine the required volume of stormwater storage. The following 11-step procedure may be used to determine the required volume of storage. Other design methods may also be used, subject to approval of the City, and as described in 3.2.8.F.

Steps	Procedure
1	Determine total drainage area in acres (A)
2	Determine composite runoff coefficient (C_u) based on existing land use
3	Determine time of concentration (t_c) in minutes based on existing conditions
4	Determine rainfall intensity (I_u) in inches/hour, based on time of concentration and from data given in Table 3-5 for the 10-year return period
5	Compute runoff based on existing land use (undeveloped) and 10-year return period: Q_u - C_uI_uA
6	Determine composite runoff coefficient (C_d) based on developed conditions and a 100-year return period
7	Determine the 100-year return intensity (I_d) for various storm durations (t_d) up through the time of concentration for the development area using Table 3-5
8	Determine developed inflow rates (Q_d) for various storm durations (t_d), measured in hours $Q_d = C_dI_dA$
9	Compute a storage rate (Std) for various storm durations (td) up through the time of concentration of the developed area. Std = Qd – Qu
10	Compute required storage volume (S_r) in acre feet for each storm duration (t_d). This assumes a triangular hydrograph of duration ($2*t_d$) hours with one peak flow of Std at t_d hours Sr = Std (t_d/12)
11	Select the largest storage volume computed in Step 10 for detention basin design.

F. Determination of Storage Volume using Other Methods
Methods other than the Regional Method for determining runoff and routing of stormwater may be used to determine the storage volume required to control stormwater runoff. The procedures or methods used must receive the prior approval of the City. The ILLUDAS, TR-20, and TR-55 models are approved by the City for appropriate use in analysis of the runoff and routing of stormwater. The use of these models or other approved procedures can be defined in a 7-step procedure to determine the required storage volume of the detention basin.

Steps	Procedure
1	Calibrate the hydrologic/hydraulic model that is to be used for prediction of runoff and routing of stormwater

2 For each storm duration listed in Table 3-5, perform Steps 3 through 6
3 Determine the 10-year, undeveloped peak flow. Denote this flow as Qu10.
4 Determine the 100-year runoff hydrograph (Hd100) for developed conditions
5 Determine the hydrograph that must be stored (Hs100) by subtracting a flow up to Qu10 from the hydrograph (Hd100) found in Step 4.
6 Determine the volume of water (Vs) to be stored by calculating the area under the hydrograph (Hs100).
7 The detention basin must be designed to store the largest volume (Vs) found for any storm duration analyzed in Step 6.

TABLE 3-5
Rainfall Intensities for Various Return Periods and Storm Durations for
Intensity (inches per hour)

Duration	Return Period in Years					
	2	5	10	25	50	100
5 min.	5.159	6.001	6.551	7.293	7.840	8.364
10 min.	4.046	4.806	5.312	6.005	6.523	7.025
15 min.	3.273	3.976	4.451	5.110	5.608	6.095
30 min.	2.244	2.795	3.174	3.709	4.120	4.525
60 min.	1.411	1.791	2.056	2.434	2.728	3.021
2.0 hrs.	0.831	1.046	1.196	1.412	1.579	1.746
4.0 hrs.	0.489	0.610	0.696	0.818	0.914	1.009
8.0 hrs.	0.288	0.356	0.405	0.475	0.529	0.583
16.0 hrs.	0.170	0.208	.0235	0.275	0.306	0.337
24.0 hrs.	0.124	0.152	0.172	0.200	0.222	0.244

G. General Detention Basin Design Requirements

Basins shall be constructed to detain temporarily the stormwater runoff which exceeds the maximum peak flow rate. The volume of storage provided in these basins, together with such storage as may be authorized in other on-site facilities, shall be sufficient to control excess runoff from the 100-year storm.

The following design principles shall be observed:

1. The maximum volume of water stored and subsequently released at the design release rate shall not result in a storage duration in excess of 48

hours unless additional storms occur within the period.

2. The maximum planned depth of stormwater stored (without a permanent pool) shall not exceed five (5) feet.

3. All stormwater detention facilities shall be separated by not less than fifty (50) feet from any building or structure to be occupied.

4. All excavated excess spoil may be spread so that slopes no steeper than 1 foot horizontal and 3 feet vertical will be allowed unless authorized by the City to promote ease of maintenance.

5. Safety screens having a maximum opening of 4 inches shall be provided for any pipe or opening to prevent children or large animals from crawling into the structure.

6. Danger signs shall be mounted at appropriate locations to warn of deep water, possible flooding conditions during storm periods, and other dangers that exist. Fencing that may be required, in any, shall be provided as directed by the City.

7. Outlet control structures shall be designed to operate as simply as possible and shall require little or no maintenance and/or attention for proper operation. They shall limit discharges into existing or planned downstream channels or conduits, so as not to exceed the predetermined maximum authorized peak flow rate.

8. Emergency overflow facilities such as weir or spillway shall be provided for release of exceptional storm runoffs or in emergency conditions, should the normal discharge devices become totally or partially inoperative. The overflow facility shall be of such design that its operation is automatic and does not require manual attention.

9. Grass of other suitable vegetative cover shall be provided throughout the entire basin area. Grass should be cut regularly at approximately monthly intervals during the growing season or as required.

10. Debris and trash removal and other necessary maintenance shall be performed on a regular basis to assure continued operation in conformance to design.

11. A report shall be submitted to the City describing: (a) the proposed development; (b) the current land use conditions; (c) the method of hydraulic and hydrologic analysis used, including any assumptions or special conditions; (d) the results of analysis; and (e) the recommended drainage control facilities. Hydraulic and hydrologic calculations, including input and output files, shall be included as appendices to the report.

12. No detention basin or other water storage area, permanent or temporary, shall be constructed under or within ten (10) feet of any pole or high voltage electric line.

13. No residential lots or any parts thereof, shall be used for any part of a detention basin or for the storage of water, either temporary or permanent.

H. Dry Bottom Basin Requirements
Detention basins which will not contain a permanent pool of water shall comply with the following requirements:

1. Provisions shall be incorporated to facilitate complete interior drainage of dry bottom basins, to include the provisions of natural grades to outlet structures, longitudinal, and transverse grades to perimeter drainage facilities, paved gutters, or the installation of subsurface drains.

2. The detention basin shall, whenever possible, be designed to serve a secondary or multipurpose function. Recreational facilities, aesthetic qualities, (open spaces) or other types shall be considered in planning the detention facility.

I. Wet Bottom Basin Design Requirements
Where part of a detention basin will contain a permanent pool of water, all the items required for detention storage shall apply except that the system of drains with a positive gravity outlet required to maintain a dry bottom basin will not be required. A controlled positive outlet will be required to maintain the design water level in the wet bottom basin and provide required detention storage above the design water level. However, the following additional conditions shall apply:

1. Basins designed with permanent pools or containing permanent ponds shall have a water area of at least one-half acre. If fish are to be maintained in the pond, a minimum depth of approximately 10 feet shall be maintained over at least 25 percent of the pond area. The remaining pond area shall have to extend to shallow areas, except as required by Subsection 3 below.

2. In excavated ponds, the underwater side slopes in the pond shall be stable. In the case of valley storage, natural slopes may be considered to be stable.

3. A safety ledge four to six feet in width is required and must be installed in all ponds approximately 30 to 36 inches below the permanent water level. In addition, a similar maintenance ledge 12 to 18 inches above the permanent water line shall be provided. The slope between the two ledges shall be stable and of a material such as stone or riprap which will prevent erosion due to wave action.

4. Periodic maintenance is required in ponds to control weed and larval growth. The pond shall also be designed to provide for the easy removal of sediment that will accumulate during periods of pond operation. A means of maintaining the designed water level of the pond during prolonged periods of dry weather is also required.

5. For emergency use, basin cleaning, or shoreline maintenance, facilities shall be provided or plans prepared for auxiliary equipment to permit emptying and drainage.

6. Facilities to enhance and maintain pond water quality shall be provided, if required to meet applicable water quality standards. Design calculations to substantiate the effectiveness of these aeration facilities shall be submitted with final engineering plans. Agreements for the perpetual operation and maintenance of aeration facilities shall be prepared to the satisfaction of the City.

J. Rooftop Storage
Detention storage requirements may be met in total or in part by detention on flat roofs. Details of such designs are to be included in the building permit application and shall include the depth and volume of storage, details of outlet devices and downdrains, and elevations of emergency overflow provisions.

K. Parking Lot Storage
Paved parking lots may provide temporary detention/storage of stormwaters on all or a portion of their surfaces. Outlets will be designed so as to empty the stored waters slowly. Depths of storage must be limited to a maximum depth of 12 inches so as to prevent damaged to parked vehicles and so that access to parked vehicles is not impaired. Ponding should, in general, be confined to those portions of the parking lots farthest from the area served.

L. Facility Financial Responsibilities
The construction cost of stormwater control systems and facilities shall be accepted as part of the cost of land development. If general public use of the facility can be demonstrated, negotiations for public participation in the cost of such development may be considered.

M. Facility Maintenance Responsibility
Maintenance of detention/retention facilities during construction and thereafter shall be the responsibility of the land developer/owner. Assignment of responsibility for maintaining facilities serving more than one lot or holding shall be documented by appropriate covenants to property deeds documented before the final drainage plans are approved.

N. Inspection
All publicly and privately owned detention storage facilities will be inspected by representatives of the City not less often than once every two years. A certified inspection report covering physical conditions, available storage capacity, and operational condition of key facility elements will be provided to the owner.

O. Corrective Measures
If deficiencies are found by the inspector, the owner of the detention/ retention facility will be required to take the necessary measures to correct such deficiencies. If the owner fails to do so, the City will undertake the work and collect from the owner using lien rights, if necessary.

P. Joint Development of Control Systems
Stormwater control systems may be planned and constructed jointly by two or more developers as long as compliance with this Chapter is maintained.

Q. Installation of Control Systems
Runoff and erosion control systems shall be installed as soon as possible during the course of site development. Detention/retention basins shall be designed with an additional six percent (6%) of available capacity to allow for sediment accumulation resulting from development and to permit the pond to function for reasonable periods between cleanings. Basins should be designed to collect sediment and debris in specific locations so that removal costs are kept to a minimum.

R. Detention Facilities in Flood Plains
If detention storage is provided within a flood plain, only the net increase in storage volume above that which naturally existed on the flood plain shall be credited to the development. No credit will be granted for volume below the elevation of the regulatory flood at the location unless compensatory storage is also provided.

S. Off-Site Drainage Provisions
When the allowable runoff is released in an area that is susceptible to flooding, the developer may be required to construct appropriate storm drains through such area to advert an increased flood hazard caused by the concentration of allowable runoff at one point instead of the natural overland distribution. The requirement of off-site drains shall be at the discretion of the City.

3.2.9 CHANGE IN PLAN

Any revision, significant change or deviation in the detailed plans and specifications after formal approval by the City shall be filed in duplicate with and approved by the City prior to implementation of the revisions or changes. Copies of the revisions or changes, if approved, shall be attached to the original plans

and specifications.

3.2.10 DETERMINATION OF IMPACT DRAINAGE AREAS

The City is authorized, but is not required, to classify certain geographical areas as Impact Drainage Areas and to enact and promulgate regulations that are generally applied. In determining Impact Drainage Areas, the City shall consider such factors as topography, soil type, capacity of existing regulated drains and distance from adequate drainage facilities. The following areas shall be designated as Impact Drainage Areas, unless good reason for not including them is presented.

A. A floodway or flood plain as designated by the IDNR.

B. Land within 75 feet of each bank of any regulated drain.

C. Land within 75 feet of the centerline of any regulated drain tile.

Land where there is not an adequate outlet, taking into consideration the capacity and depth of the outlet may be designated as an Impact Drainage Area by resolution of the City. Special requirements for development within any Impact Drainage Area shall be included in the resolution.

3.2.11 DISCLAIMER OF LIABILITY

The degree of protection required by this Chapter is considered reasonable for regulatory purposes and is based on historical records, and engineering and scientific methods of study. Larger storms may occur, or stormwater runoff depths may be increased by man-made or natural causes. This Chapter does not imply that land uses permitted will be free from stormwater damage. This Chapter shall not create liability on the part of the City, or any officer or employee thereof for any damage which may result from reliance on this Chapter or on any administrative decision lawfully made thereunder.

SECTION 3.3: MATERIAL SPECIFICATIONS

3.3.1 SEWER PIPE

A. All pipe shall conform to the applicable specifications and requirements set forth herein.

B. Pipe used in storm sewer construction shall be of reinforced concrete, corrugated smooth walled interior high density polyethylene pipe (HDPE), or polyvinyl chloride pipe (PVC); unless specified on the drawings, whereby this will be the only acceptable type of pipe installed.

C. All flexible storm sewer pipe must meet a deflection of 7.5%.

3.3.2 PIPE MATERIALS

A. Concrete Pipe, Plain and Reinforced
   1. Shall conform in all respects with, ASTM C76, AASHTO M170 or ASTM C361 for Reinforced Low Head Concrete Pipe.

B. Corrugated Smooth Walled Interior High Density Polyethylene Pipe (HDPE)
   1. Corrugated HDPE pipe shall conform to AASHTO M294 Type S for sizes 12" and largerJoints shall be bell and spigot and shall be watertight. Rubber gasket for joints shall conform to ASTM F477.

C. Polyvinyl Chloride (PVC) Pipe
   Shall have an SDR (Standard Dimension Ratio) of not greater than 35.

   2. For depths of bury through 15 feet a minimum wall thickness of SDR 35 as defined in Section 7.4.1 of ASTM D3034 is required. For depths of bury greater than 15 feet, a minimum wall thickness of SDR 26 is required.

3.3.3 MANHOLES, CATCH BASINS AND INLETS (STRUCTURES)

A. Reinforced Concrete
   1. These structures shall be erected of precast, or cast in place, reinforced concrete sections to the shape of the manhole. Steps shall be cast in place in accordance with the standards as shown on the construction standards. All concrete, reinforcing and wall thickness shall be in accordance with ASTM C478, latest edition. All structure joints shall be watertight and constructed in accordance with ASTM C443, latest edition. The bottom of the structures shall be of either precast, poured in place, or monolithic bottom stack, with 3,000 psi concrete to conform to the plans and shall be at least eight (8) inches thick and shall be reinforced as shown on the construction standards

B. Precast Manhole Components
   1. Shall conform with ASTM C478, latest edition, and with design dimensions. Cones and sections shall be substantially free from fractures, large or deep cracks and surface roughness. Slabs shall be sound and free from gravel pockets. All precast manhole components shall be manufactured by an experienced and reputable manufacturer whose precast manhole components have been used commercially for at least three (3) years.

C. Monolithic Concrete Manholes
   1. Shall conform to the contract drawings and/or the construction standards.

Walls and base dimensions shall be of approved thickness and the maximum step spacing shall be sixteen (16) inches.

D. Manhole Joints
   1. Storm sewer manholes shall be either flexible rubber gasket.

E. Cast Iron Frames & Covers
   1. Shall conform to the requirements of ASTM A48 for Gray Cast Iron, latest edition. The dimensions, weights and finish preparation shall conform to the appropriate construction standards.

F. Ductile Cast Iron Frames, Covers and Grates
   1. Shall conform to the requirements of ASTM A536 for Ductile Cast Iron, latest edition. The dimensions, weights and finish preparation shall conform to the appropriate construction standards.
   2. Manhole covers shall have the word "Storm" cast into the lid.

G. Steps
   1. Manhole steps shall meet the requirements of ASTM C478, latest revision. Step spacing shall be a minimum of 12" (equal spacing).

H. Adjustment Risers and Shims
   1. Rubber adjustment risers and shims shall be Infra-Riser as manufactured by GNR Technologies, or approved equal. HDPE and concrete riser rings will also be acceptable.

3.3.4 JOINTS, FITTINGS AND APPURTENANCES

A. Joints for Storm Sewers
   1. Elastomeric seals for gasketed joints for corrugated PVC shall meet ASTM F477

   2. Flexible rubber gasket joints for concrete sewer pipe shall conform to the requirements of ASTM C443, joints for circular concrete sewer and culvert pipe, using flexible watertight, rubber gaskets. Storm sewer pipe larger than 24-inch diameter may be tongue and groove plain joint unless the sewer is under a pavement or specifically called for otherwise on the plans. If plain joint is used, an approved bitumastic material shall be applied to each joint.

   3. Coupling bands for use with corrugated metal pipe shall be "hugger" type with "O" rings.

   4. The PVC joint shall conform to ASTM D3212 "push on" type with a confined rubber gasket conforming to ASTM F477.

B. Fittings
   1. PVC sewer fittings shall conform to the requirements of ASTM D3034

specifications. Four-, six-, and eight-inch fittings shall be molded in one piece, with elastomeric joints and minimum socket depths as specified in Section 6.2 and 7.3.2 of the D-3034 specification. Fittings 10 inches and larger shall be molded or fabricated from pipe meeting ASTM D3034 with manufacturer's standard pipe bells and gaskets.

2. The PVC fittings for corrugated pipe shall conform to ASTM F794, latest edition.

C. Plug for Fittings
1. All fittings shall be capped with a plug of the same material as the pipe, and gasketed with the same gasket material as the pipe joint, or be of material approved by the City. The plug shall be able to withstand all test pressures involved without leakage.

SECTION 3.4: CONSTRUCTION REQUIREMENTS

3.4.1 SURFACE CONDITIONS

A. Examine the areas and conditions under which work of this section will be performed. Correct conditions detrimental to timely and proper completion of the Work. Do not proceed until unsatisfactory conditions are corrected.

3.4.2 FIELD MEASUREMENTS, SURVEY LINES, REFERENCE POINTS & GRADES

A. Make necessary measurements in the field to assure precise fit of items in accordance with the approved design.

3.4.3 INSTALLATION OF PIPE

A. Trenching
1. All poles, fences, sewer, gas, water or other pipes, wires, conduits, manholes, buildings, structures and property in the proximity of any excavation shall be supported and protected from damage by the Contractor during construction.

2. Wherever sewer, gas, water or other pipes or conduits cross the excavation, the Contractor shall support said pipes and conduits without damage to them and without interrupting their use during the progress of the Work. The manner of supporting such pipes, etc., shall be subject to review by City.

3. All property shall be thoroughly cleaned of all surplus materials, earth and rubbish placed thereon by the Contractor.

4. The Contractor shall notify City and the appropriate utility companies at least seventy-two (72) hours prior to the start of construction.

a. The Contractor shall coordinate all utility companies location of any existing underground utilities and structures within the site limits.
b. The Contractor, prior to the start of construction, shall verify the location of any existing underground utilities and structures within the site limits. It is the Contractor's responsibility to make any and all exploratory investigation which may be necessary to verify or locate the utility pipe, wires, structures and appurtenances of others.

5. The Contractor shall locate the storm sewer piping per Plan.
   a. Where concrete encasement is used, provide not less than 4-inch thickness including that on pipe joints.

B. Laying Pipe
1. All pipe shall be re-inspected for soundness and damage due to handling immediately before being lowered into the trench. Any pipe found to be unsound or damaged will be rejected and shall be removed immediately from the site of the work.

2. All pipe shall be laid accurately to the required line and grade in such manner as to form a close, concentric joint with the adjoining pipe and to bring the invert of each section to the required grade. Bell holes shall be dug in advance of the pipe being laid as required. The supporting of the pipe on blocks will not be permitted.

3. Pipe laying shall proceed upgrade, beginning at the lower end of the sewer, unless otherwise approved by the City.

4. All open ends of pipes and branches shall be sealed with plugs or bulkheads firmly held in place in a manner acceptable to the City.

5. At the end of each day's work, the open ends of all pipes shall be satisfactorily protected against the entrance of animals, earth or other materials.

6. Each length of section shall be properly pulled or shoved "home" with a winch or come-a-long against the section previously laid to make a proper joint. The pipe shall then be securely held in position during the backfill operations. Joints shall not be pulled or cramped more than the design of the joint will permit and so as not to injure the conduit.

C. Dewatering
1. Dewatering sufficient to maintain the water level below the surface of the trench bottom shall be accomplished prior to pipe laying and jointing, if not done prior to excavation and placement of the bedding as called for. The dewatering operation, however accomplished, shall be carried out so that it does not destroy or weaken the strength of the soil under or alongside the trench. When the dewatering operation is ended, the trench shall be replaced in such a manner so as not to disturb the pipe and its

foundation.

D. Abandoning Pipe or Structures
   1. Where called for on the plans to be abandoned, said sewers or structures shall be permanently plugged or bulkheaded. Where standard "plugs" are available, they shall be employed. For other pipes or structures, the use of brick and mortar or concrete may be used in a manner suitable to the City.

E. Bedding, Rigid Pipe
   1. Each pipe shall be laid in Class "B" bedding unless specifically noted otherwise, as shown on the Bedding and Backfill details of the Construction Standards. All costs for bedding shall be included in the cost of the sewer pipe.

a. Definition of Terms for Bedding Explanation

Bc = Outside diameter of pipe, in inches

D = Inside diameter of pipe, in inches

d = Depth of bedding material below the pipe bell, in inches

The values of "d", depth of bedding material below the bell of the pipe shall be as follows:

"D" (inside dia. of pipe, in.)	"d" (depth of bedding material) Minimum Requirements
27" and smaller	3"
30" to 60"	4"
66" and larger	6"

2. Class "A" Bedding (Concrete Cradle)
   a. Class "A" bedding is that method of bedding in which the conduit is set on "d" inches of concrete in an earth foundation and encased in concrete up to 1/4" of "Bc" to fit the lower part of the conduit's exterior breadth. The remainder of the conduit is to be surrounded to a height of at least twelve (12) inches above its top by densely compacted granular backfill material carefully placed by hand to completely fill all spaces under and adjacent to the conduit. The fill to be tamped thoroughly on each side of the conduit, as far as practicable, shall be in layers not to exceed six (6) inches in thickness.

   b. The concrete used for Class "A" bedding shall be plain concrete with a 28-day compressive strength of 3,000 psi, unless otherwise specified. Refer to "Bedding & Backfill Details" of the Construction Standards for further details on Class "A" bedding.

3. Class "B" Bedding
   a. Class "B" bedding is that method of bedding in which the conduit is set on "d" inches of a fine granular material (sand cushion) in an earth foundation, carefully shaped to fit the lower part of the conduit exterior for a width of at least 60% of the conduit's breadth. The remainder of the conduit is to be surrounded to a height of at least twelve (12) inches above its top by densely compacted granular backfill material carefully placed by hand to completely fill all spaces under and adjacent to the conduit. The fill to be tamped thoroughly on each side and under the conduit, as far as practicable, in layers not to exceed six (6) inches in thickness. Bell excavation is to be provided. Refer to "Bedding & Backfill Details" of the Construction Standards for further details on Class "B" Bedding.

b. Class "B" bedding material shall be as follows:
   1. B Borrow per Section 211 of the current INDOT specifications, except that no more than 12% or less than 5% shall pass the No. 200 sieve (silt or clay).
   2. No. 8 stone per Section 904 of the current INDOT Specifications.

4. Class "C" Bedding
   a. Class "C" bedding is that method of bedding in which the conduit is set on an earth foundation, carefully shaped to fit the lower part of the conduit exterior for a width of at least 50% of the conduit's breadth. The remainder of the conduit is to be surrounded to a height of at least twelve (12) inches above its top by lightly compacted granular backfill material carefully around the exterior of the conduit. Bell excavation is to be provided. Refer to "Bedding & Backfill Details" of the Construction Standards for further details on Class "C" Bedding.

F. Bedding, Flexible Pipe
   1. Each pipe shall be laid in a Class I or Class II bedding, as shown on the construction details. Pipe bedding material and installation shall conform to ASTM D2321.

G. Existing Sewer Removal and Replacement
   1. Where called for on the plans, existing sewer lines shall be completely removed and replaced with new. The Contractor is required to maintain service during said removal and replacement, which may entail bypass pumping. The Contractor shall inform the City of the method proposed for maintaining service. All such costs including additional bedding shall be included in the cost of the new replacement sewer.

H. Sheet Piling
   1. Sheet piling (permanent or temporary) shall be provided as required, for construction in areas where wide excavations cannot be permitted, or for an excavation that is open for an extended period, or where soil conditions dictate to protect adjacent structures, roadways and utilities.

   2 The section modulus of piling sections shall be as required to function properly as intended.

   3. Piling sections shall be marked for length and sorted and stacked at the job site to prevent distortion and to facilitate proper sequence of setting and driving.

   4. Interlocks shall be protected from becoming obstructed by sand, gravel, mud or other materials.

   5. Pile tips are approved for use at the Contractor's option.

I. Backfill Materials

1. Granular Backfill shall be “B” Borrow per Section 211 of the current INDOT specifications or No. 8 Stone or No. 12 Stone per Section 904 of the current INDOT specifications.
2. Earth backfill material shall contain no more than 5% organic material, no particles larger than four inches and shall be free of trash, rubble and debris. The Plastic Index of the fraction passing the No. 40 sieve shall not be more than 25.
3. Coarse aggregate material shall be No. 53 or 73 complying with INDOT Standard Specifications, current edition.
4. Flowable fill shall be in accordance with Section 213 of the INDOT Standard Specifications, current edition.
5. Geotextile for use with No. 8 or No. 12 Stone shall be per Section 913.19 of the current INDOT specifications.

3.4.4 GENERAL TRENCHING

A. Unless otherwise directed or permitted, not more than one hundred feet (100') of any trench shall be open at any time.

B. Surface encumbrances, located so as to create a hazard to employees involved in excavation work or in the vicinity thereof at any time during operations, shall be removed or made safe before excavating is begun.

C. During excavation, material satisfactory for backfilling shall be stockpiled in an orderly manner at a distance from the banks of the trench sufficient to avoid overloading and to prevent slides and cave-ins. Adequate drainage shall be provided for the stockpiles and surrounding areas by means of ditches, dikes, or other approved methods. The stockpiles shall also be protected from contamination with unsatisfactory excavated material or other material that may destroy the quality and fitness of the suitable stockpiled material. If the Contractor fails to protect the stockpiles and any material becomes unsatisfactory as a result, such material, if directed by the City, shall be removed and replaced with satisfactory on-site or imported material from approved sources.

D. Grading shall be done as may be necessary to prevent surface water from flowing into the excavation, and any water accumulating therein shall be removed so that the stability of the bottom and sides of the excavation is maintained. In wet trenches dewatering equipment shall be operated ahead of pipe laying and the water level kept below the pipe invert.

E. The trench shall be excavated as shown in these Standards or as recommended by the manufacturer of the pipe to be installed, whichever is more stringent. Trench walls below and above the top of the pipe shall be sloped, or made vertical, as recommended in the manufacturer's installation manual. The trench width below an elevation one foot above the top of pipe shall not exceed that recommended in the installation manual. Where no manufacturer's installation manual is available, trench walls below an

elevation one foot above the top of pipe shall be vertical and trench walls one foot or more above the top of pipe shall be adequately sloped as required to prevent slides and cave-ins unless proper precautions, as stipulated by OSHA, are taken. If adequate trench slopes cannot be provided in the available work space and right-of-way limits, then use of sheeting and shoring and/or a trench box is mandatory.

F. Excavation for manholes or similar structures shall be sufficient to leave at least 12 inches clear between the outer structure surfaces and the face of the excavation or support members and be of sufficient size to permit the placement and removal of forms for the full length and width of structure footings and foundations. When concrete is to be placed in an excavated area, special care shall be taken not to disturb the bottom of the excavation. Excavation to the final grade level shall not be made until just before the concrete is to be placed.

G. Dust conditions shall be kept to a minimum by the use of water. The use of salt, or calcium chloride will not be permitted.

H. The Contractor shall saw cut hard surfaces along straight lines when trenching occurs in pavement, sidewalks, or driveways. Upon completion of backfilling and compaction testing, the contractor shall replace in kind all pavements and surfaces encountered and match original elevations, lines, and grades.

3.4.5 REMOVAL OF MATERIAL

A. As trenches are backfilled, the Contractor shall remove all surplus material, regrade and leave clear, free, and in good order all roadways and sidewalks affected by the construction of the work. During the progress of and until the expiration of the guarantee period, he shall maintain in good and safe conditions the surface or any street over the trenches and promptly fill all depressions over and adjacent to trenches caused by settlement of backfilling.

B. Surplus or unsatisfactory excavated material shall be properly disposed of at a location off the property limits.

3.4.6 STABILIZATION

A. If portions of the bottom of trenches or excavations consist of material unstable to such a degree that, in the opinion of the City inspector, it cannot adequately support the pipe of structure, the bottom shall be overexcavated and stabilized with granular material in compliance with the INDOT Standard Specifications, current edition. Depth of stabilization shall be as directed by the inspector.

3.4.7 BACKFILLING

A. Pipe bedding and initial backfill shall be clean granular material to a depth as shown on the Drawings. Initial backfill shall be placed in lifts of a maximum of 6 inches loose thickness. The method for placing and compacting the backfill shall comply with the INDOT Standard Specifications as applicable. At a minimum, the Contractor shall use a vibrating plate compactor with adequate passes to achieve compaction. The backfill shall be brought up evenly on both sides of pipe for the full length of pipe. Care shall be taken to ensure thorough compaction of the fill under pipe haunches.

B. Final backfill for the remainder of the trenches shall be as follows:
   1. Backfill for trenches under sidewalks, under turfed or seeded areas, and in miscellaneous areas shall be of approved earth material and contain no stones over four inches (4") in their largest dimensions. Stones which are used in backfilling shall be distributed among the earth backfill so that all interspaces are filled with fine material. All such backfilling shall be deposited in lifts of a maximum 12 inches loose thickness and compacted with a vibrating plate compactor or approved mechanical tamping devices. Excess earth to the amount required to replace settlement shall be neatly rounded over the trench and the remainder hauled off the work site. Trenches shall be maintained by the Contractor until settlement has ceased and trenches remain level with the adjacent ground.

   2. Backfill of all trenches under proposed roadways and structural footings or slabs shall be approved granular material ~~only~~. In addition, the top seven inches below the base of the pavement shall be backfilled with no. 53 / 73 crushed stone. The backfill shall be placed in 6" maximum lifts and the method of placing and compacting the backfill shall comply with the INDOT Standard Specifications, as applicable. At a minimum, the Contractor shall use a vibrating plate compactor with adequate passes to achieve compaction.

   3. If No. 8 stone or No. 12 stone is used as a trench backfill material, then the compaction requirement for this material shall be waived. If No. 8 stone or No. 12 stones used under proposed pavement, then a layer of geotextile fabric shall be placed on top of the No. 8 stone and before the No. 53 or 73 crushed stone is placed.

   4. Backfill for trenches under or within five (5) feet of existing city streets shall be flowable fill.

C. Pipe bedding and each backfill lift shall be compacted to a dry density not less than the following percentage of maximum dry density as determined by the Modified Proctor Test (ASTM D-1557):

Usage	Compaction %
Beneath piping	95
Upper 2 feet of backfill under roadways	95
Under roadways (except upper 2 feet of backfill)	92
Under haunches and up to springline of pipe	95
From springline to 12 inches above top of pipe	90
Adjacent to (or behind) vertical walls	90
Under turfed or seeded areas below topsoil, and miscellaneous area (from 12" above pipe to surface)	85

B. No fill shall be placed against any manhole or other structure until placed concrete has been allowed to cure for at least 3 days. Backfill shall be placed in such a manner that the structure will not be damaged by shock from falling earth. The backfill material shall be deposited and compacted as specified for final backfill, and shall be placed in such a manner as to prevent eccentric loading and excessive stress on the structure. Heavy equipment for spreading and compacting shall not operate closer to foundation walls than set forth as follows.

1. Fill placed adjacent to vertical or near vertical walls (within a zone defined by imaginary lines extending horizontally away from the base of the wall for a distance of three feet and thence upward and outward on a one to one slope to the elevation of the top of the wall) shall be compacted to the specified density with light equipment not exceeding 1500 pounds in static weight or dynamic rated impact.

3.4.8 COMPACTION TESTING

A. Sampling and testing shall be the responsibility of the Contractor. Tests shall be performed by an approved commercial testing laboratory or may be tested with approved facilities furnished by the Contractor.

B. Laboratory tests for moisture-density relations shall be determined in accordance with ASTM D1557. A minimum of one test shall be performed on each different type of material used for backfill, or as directed by the City inspector.

C. Field In-Place Density Tests:
1. Shall be performed in sufficient numbers to ensure that the specified compaction is being obtained. A minimum of one test per lift of backfill for every 200 feet of installation shall be performed. Locations for performing the density tests will be coordinated with the City inspector.

2. Shall be determined in accordance with ASTM D1556, ASTM D2167 or ASTM D2922. When ASTM D2922 is used, the calibration curves shall be checked and adjusted using only the sand cone method as per ASTM

D1556. ASTM D2922 results in a wet unit weight of soil and when using this method, ASTM D3017 shall be used to determine the moisture content of the soil. The calibration curves furnished with the moisture gages shall be checked along with density calibration checks as described in ASTM D3017. The calibration checks of both the density and moisture gages shall be made at the beginning of a job, on each different type of material encountered and at intervals as directed by the City inspector. Copies of calibration curves and results of calibration tests shall be furnished to the inspector.

D. All test results shall be submitted to the inspector.

E. Trenches improperly compacted shall be reopened to the depth directed by the inspector and then refilled and compacted to the density specified. Field in-place density tests shall also be repeated for improperly compacted trenches that are reopened, refilled and recompacted. A minimum of one repeat test per lift of backfill for every 200 feet of improperly compacted trench that is reopened, refilled and recompacted shall be performed.

3.4.9 INSTALLATION OF MANHOLES, CATCH BASINS & INLETS (STRUCTURES)

A. Dewatering
   1. Shall conform to the same requirements as for sewer trench dewatering.

B. Sheet Piling
   1. Shall conform to the same requirements as for sewer trench piling.

C. Bedding for Structures
   1. Precast base sections shall be placed on a well-graded granular bedding course conforming to the requirements for sewer bedding, but not less than four (4) inches in thickness and extending to the limits of the excavation. The bedding course shall be firmly tamped and made smooth and level to assure uniform contact and support of the precast element.

D. Cast-in-Place Bases
   1. Unless otherwise specified, cast-in-place bases shall be at least eight (8) inches in thickness and shall extend at least six (6) inches radially outside of the outside dimensions of the manhole section. The cast-in-place base shall be made of 3,000 psi concrete, 28-day compression test, and shall be reinforced as shown on the construction standards.

E. Lift Holes
   1. All lift holes in precast elements shall be thoroughly wetted and then be completely filled with non-shrinking concrete grout, smoothed and painted both inside and out, to ensure water tightness.

F. Placing Precast Sections
   1. Precast sections shall be placed and aligned to provide vertical sides and

vertical alignment of the ladder rungs. The completed manhole shall be rigid, true to dimensions and be watertight.

G. Placing of Castings

1. Castings placed on concrete surface shall be set in full grout beds. The grout shall be mixed in proportion of one (1) part Portland Cement to three (3) parts sand, by volume, based on dry materials. Castings shall be set accurately to the finished elevation so that no subsequent adjustment will be necessary, or unless otherwise specified by the City.

2. After grout has cured, use an approved bitumastic material around the outside of casting to ensure water tightness.

3. Where work is in paved streets or areas which have been brought to grade, not more than fifteen (15) inches shall be provided between the top of the cone or slab and the underside of the manhole casting for adjustment of the casting to street grade.

4. Where work is in the unimproved street or alley, not less than twelve (12) inches of adjusting rings shall be provided between the top of the cone or slab and the underside of the manhole casting for adjustment of the casting to finished grade. The top of the manhole casting shall be flush with the finished grade, unless otherwise shown.

5. Where work is in cultivated areas, the top of the manhole casting shall be buried three (3) feet, and in non-cultivated areas, the casting shall be flush with the finished grade, unless otherwise directed by the City.

6. Where the last manhole section is a reducing cone and is set to final grade as required by the City; then if as part of the continuous work, it becomes necessary to lower this casting and it entails going below the cone, compensation to the Contractor will be allowed for said adjustment and changing of the manhole stacks.

7. When concrete adjusting rings are used to set the castings to grade, they shall be pointed up and a grout bed placed between each ring and casting; and made watertight with a heavy coating of an approved bitumastic material on the outside of structure. The casting is flush with surrounding pavement.

8. When rubber adjustment rings are used to set castings to grade, they shall be positioned so that the casting is flush with surrounding pavement.

H. Channels and Inverts

1. Channels and inverts shall be made to conform accurately to the sewer characteristics and grades, and shall be brought together smoothly with well-rounded junctions, satisfactory to the City and in conformance with the construction standards, unless otherwise directed.

I. Pipe Connections

1. Special care shall be taken to see that the opening through which pipes enter the structure have all pipe ends sawed and smoothed completely. Pipes are to be firmly full of jointing material at entrance to manhole to ensure watertightness. The pipes shall not protrude farther than three (3) inches into the inside face of the manhole, measured along the horizontal center of the pipe.

2. In case of smooth sidewall pipe, rubber water stops, "O"-Ring gaskets, or poured-in-place pipe sleeves shall be used for watertightness between the pipe and manhole.

3. When new holes are required in the manhole, they shall be core drilled or star drilled in a circle of the required diameter and then knocked out. In no instance shall new holes be sledge-hammered out. Pipe connections shall be provided with a concrete collar or a watertight seal. Concrete collars shall be of Class A concrete in accordance with Section 702 of the current INDOT specifications. For concrete collars, a six (6) inch bead of concrete shall be provided on the outside of the connection measured in any direction from the opening in the manhole or inlet so as to prevent leakage. The pipe and concrete shall be flush with the interior wall of the manhole or inlet. Watertight seals shall be in accordance with ASTM C923 - Standard Specification for Resilient Connectors Between Reinforced Concrete Manhole Structures, Pipes and Laterals.

3.4.10 GRADE ADJUSTMENT OF EXISTING STRUCTURES

A. Both adjusting castings to grade and reconstruction of structures shall conform with the applicable provisions of the Indiana Department of Transportation Standard Specifications, current edition.

3.4.11 RECORD DRAWINGS

A. No sewer system shall be accepted by the City of Batesville unless the installer provides at least two sets of “As Built” drawings. The “As Built” drawings shall show the actual location of the sewer and/or the detention structure, the actual sewer and/or detention structure elevations (referenced in MSL), and lengths, lateral locations and depths, and final casting grades. All lateral measurements shall be referenced to permanent landmarks. Also required are the data and calculations showing final detention basin volume. A registered engineer shall certify “As-Built” drawings and shall be provided in a hard copy format and a digital format in either AutoCAD or Adobe.

END OF SECTION

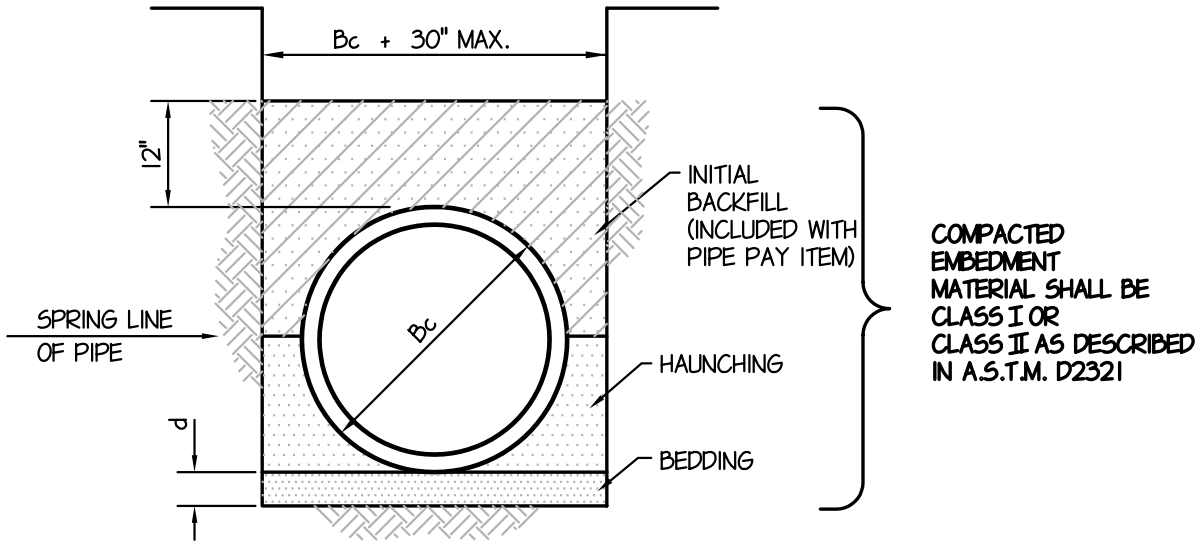

GRANULAR FOUNDATION

DEPTH OF BEDDING MATERIAL BELOW PIPE	
D	d(MIN.)
27" & SMALLER	4"
30" TO 60"	4"
66" & LARGER	6"

LEGEND

Bc = OUTSIDE DIAMETER

D = INSIDE DIAMETER

d = DEPTH OF BEDDING MATERIAL BELOW PIPE BELL

NOTE:

FOR ROCK OR OTHER NON-COMPRESSABLE MATERIAL: THE TRENCH SHOULD BE OVER-EXCAVATED A MIN. OF 6" & REFILLED WITH GRANULAR MATERIAL.

BATESVILLE STORM WATER

BEDDING & BACKFILL DETAILS

FLEXIBLE SEWER PIPE BEDDING DETAIL (CLASS I & II)

SCALE: NONE	DATE: AUG. 2004	DWG. NO. BB-1

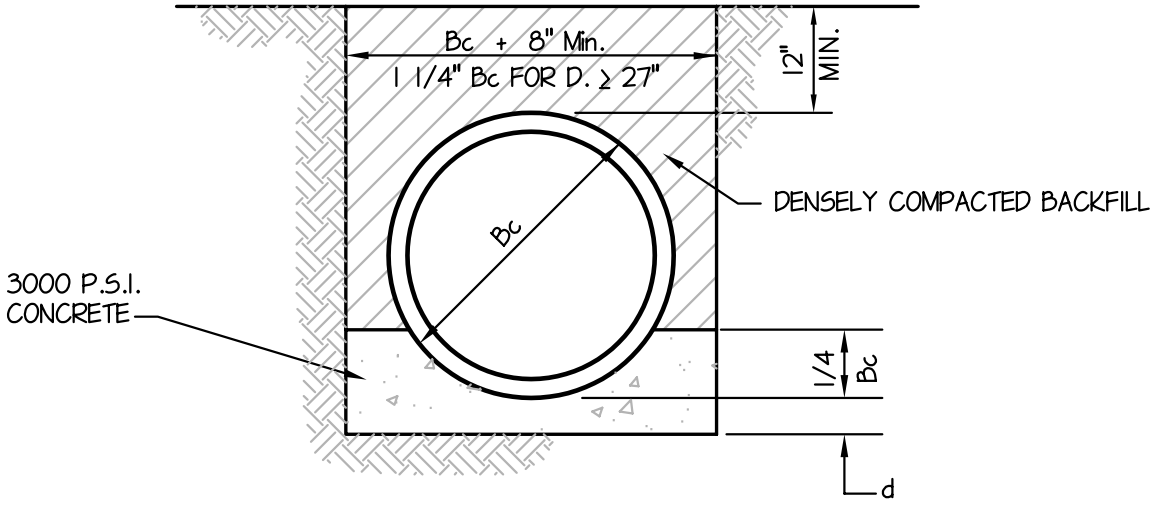

CONCRETE CRADLE

DEPTH OF BEDDING MATERIAL BELOW PIPE	
D	d(MIN.)
27" & SMALLER	3"
30" TO 60"	4"
66" & LARGER	6"

LEGEND

Bc = OUTSIDE DIAMETER

D = INSIDE DIAMETER

d = DEPTH OF CONCRETE CRADLE BELOW PIPE BELL

NOTE:

FOR ROCK OR OTHER NON-COMPRESSABLE MATERIAL: THE TRENCH SHOULD BE OVER-EXCAVATED A MIN. OF 6" & REFILLED WITH GRANULAR MATERIAL.

BATESVILLE STORM WATER

BEDDING & BACKFILL DETAILS

RIGID PIPE BEDDING DETAIL (CLASS "A")

SCALE: NONE	DATE: AUG. 2004	DWG. NO. BB-2

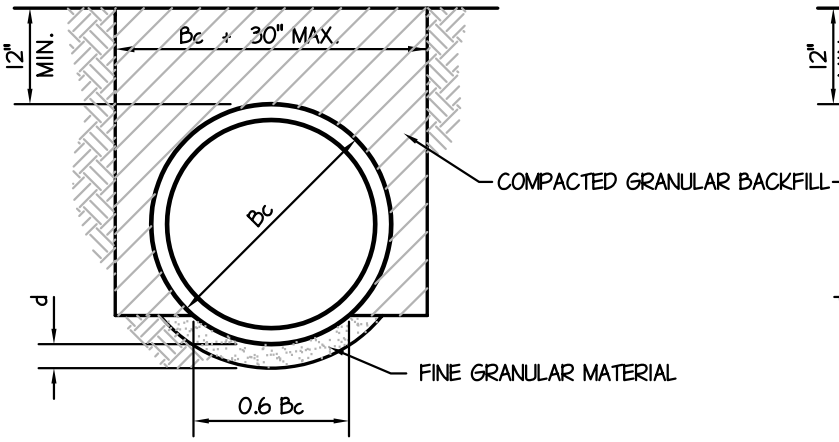

SHAPED SUBGRADE WITH GRANULAR FOUNDATION

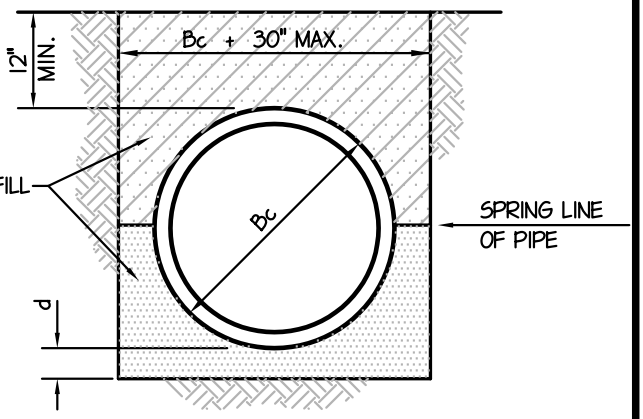

GRANULAR FOUNDATION

DEPTH OF BEDDING MATERIAL BELOW PIPE	
D	d(MIN.)
27" & SMALLER	3"
30" TO 60"	4"
66" & LARGER	6"

LEGEND

Bc = OUTSIDE DIAMETER

D = INSIDE DIAMETER

d = DEPTH OF BEDDING MATERIAL BELOW PIPE BELL

NOTE:

FOR ROCK OR OTHER NON-COMPRESSABLE MATERIAL: THE TRENCH SHOULD BE OVER-EXCAVATED A MIN. OF 6" & REFILLED WITH GRANULAR MATERIAL.

BATESVILLE STORM WATER

BEDDING & BACKFILL DETAILS

RIGID PIPE BEDDING DETAIL (CLASS "B")

SCALE: NONE	DATE: AUG. 2004	DWG. NO. BB-3

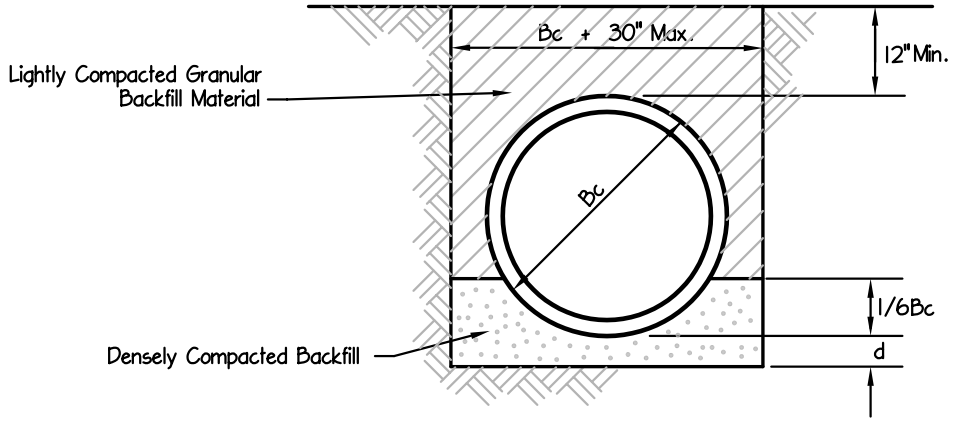

GRANULAR FOUNDATION

DEPTH OF BEDDING MATERIAL BELOW PIPE	
D	d(MIN.)
27" & SMALLER	3"
30" TO 60"	4"
66" & LARGER	6"

LEGEND

Bc = OUTSIDE DIAMETER

D = INSIDE DIAMETER

d = DEPTH OF BEDDING MATERIAL BELOW PIPE BELL

NOTE:

For Rock or Other Non-Compressable Material:
The Trench should be over-excavated a min. of 6" & refilled with Granular Material.

BATESVILLE STORM WATER

BEDDING & BACKFILL DETAILS

RIGID PIPE BEDDING DETAIL (CLASS "C")

SCALE: NONE	DATE: AUG. 2004	DWG. NO. BB-4

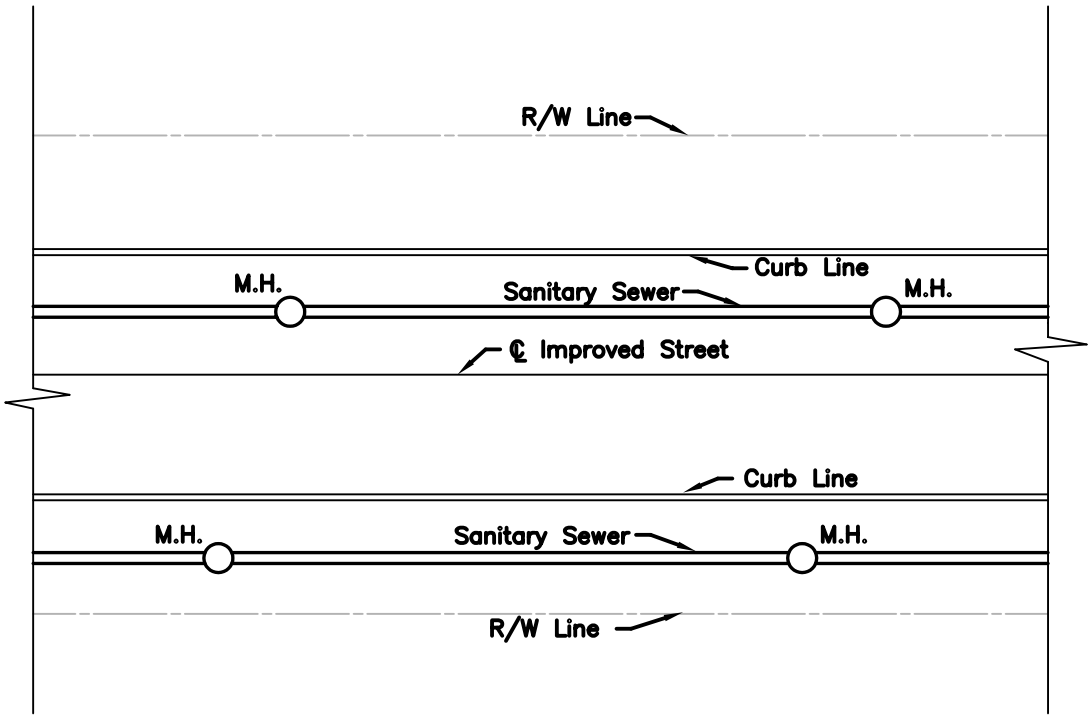

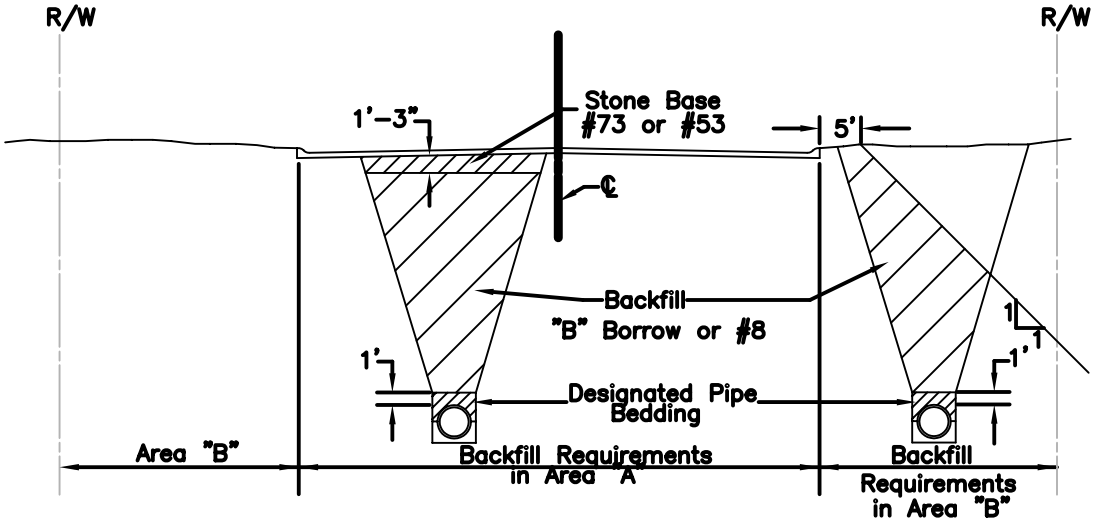

NOTE:
PLACE A FABRIC LAYER ON TOP OF THE "B" BORROW OR #8 STONE PRIOR TO PLACEMENT OF THE COMPACTED #53 OR #73 STONE BASE

(FOR PIPE LINES WITHIN RIGHT OF WAY FOR IMPROVED STREETS)

BATESVILLE
STORM WATER

BEDDING & BACKFILL DETAILS		
BACKFILL REQUIREMENTS (WITHIN R/W)		
SCALE: NONE	DATE: AUG. 2004	DWG. NO. BB-5

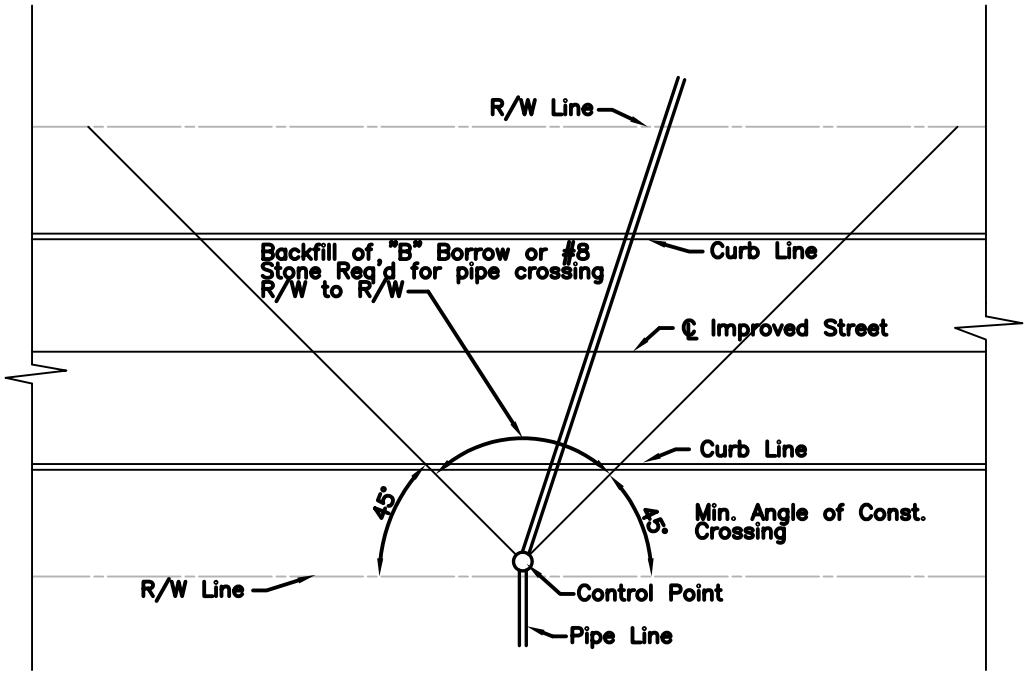

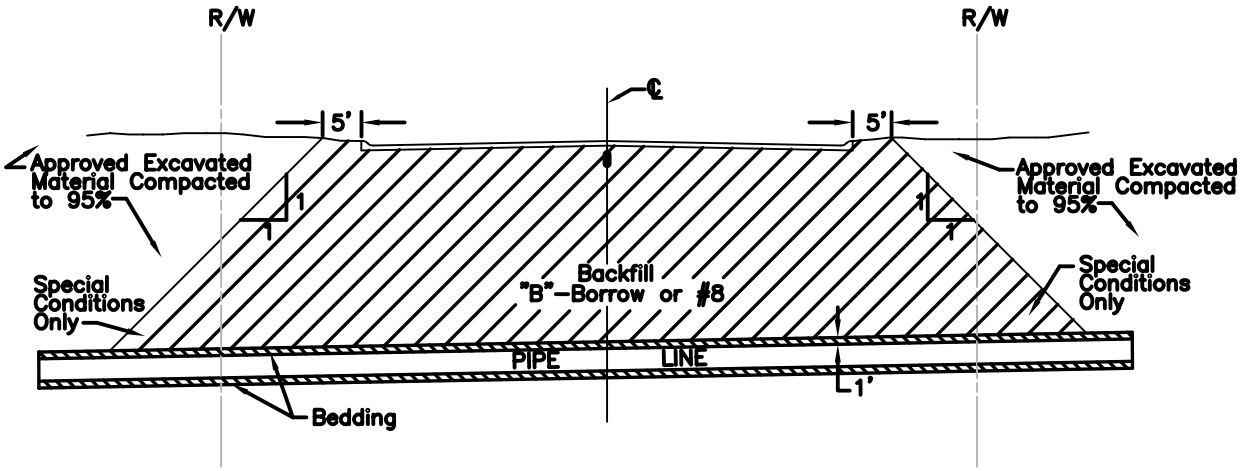

NOTE:
PLACE A FABRIC LAYER ON TOP OF THE "B" BORROW OR #8 STONE PRIOR TO PLACEMENT OF THE COMPACTED #53 OR #73 STONE BASE
(FOR PIPE LINES CROSSING RIGHT OF WAY FOR IMPROVED STREETS)

BATESVILLE STORM WATER

BEDDING & BACKFILL DETAILS

BACKFILL REQUIREMENTS (CROSSING R/W)

SCALE: NONE	DATE: AUG. 2004	DWG. NO. BB-6

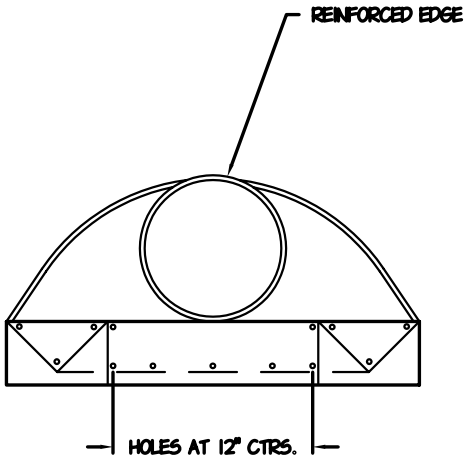

NOTE: FOR PIPE DIAMETER <30" USE 16 GAUGE GALVANIZED STEEL. FOR 30" AND LARGER USE 14 GAUGE GALVANIZED.

TYPE 1

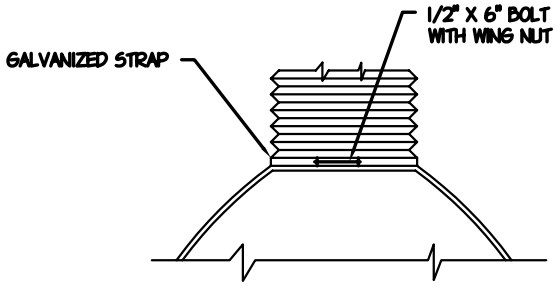

TYPE 2

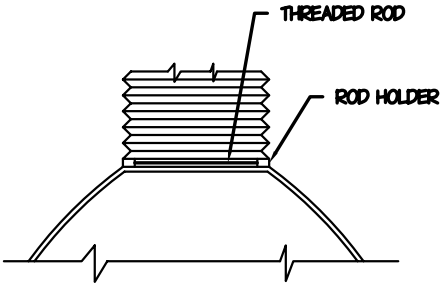

BATESVILLE STORM WATER

STORM WATER DETAILS

METAL FLARED END SECTION

SCALE: NONE	DATE: AUG. 2004	DWG. NO. M-1

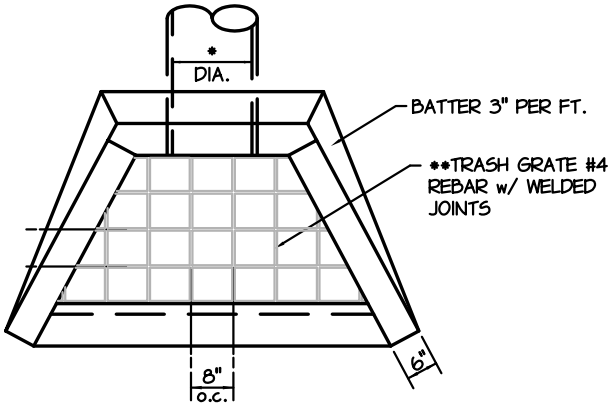

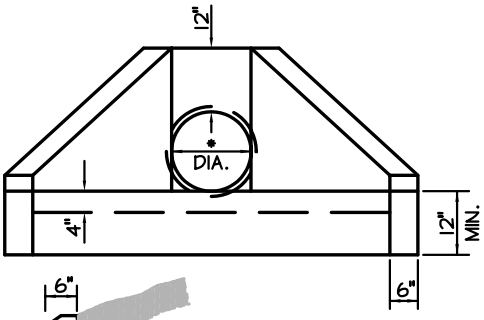

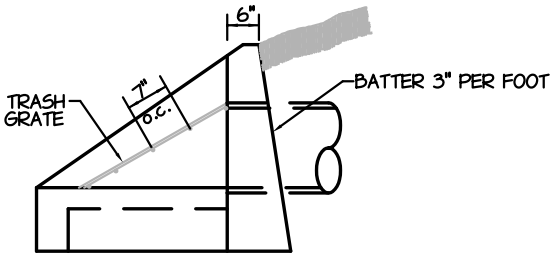

PREMANUFACTURED CONCRETE FLARED END SECTION CONCRETE SHALL BE 3,000 P.S.I. (MINIMUM) EXACT DIMENSIONS PER THE MANUFACTURE

NOTE: PLACE FASTENERS INTO CONC. END SECTION AND BOLT TRASH GRATE MUST BE ABLE TO BE REMOVED FOR CLEANING AND MAINTENANCE.

*SEE PROFILES FOR PIPE SIZE

BATESVILLE STORM WATER

STORM WATER DETAILS

CONCRETE FLARED END SECTION

SCALE: NONE	DATE: AUG. 2004	DWG. NO. M-2

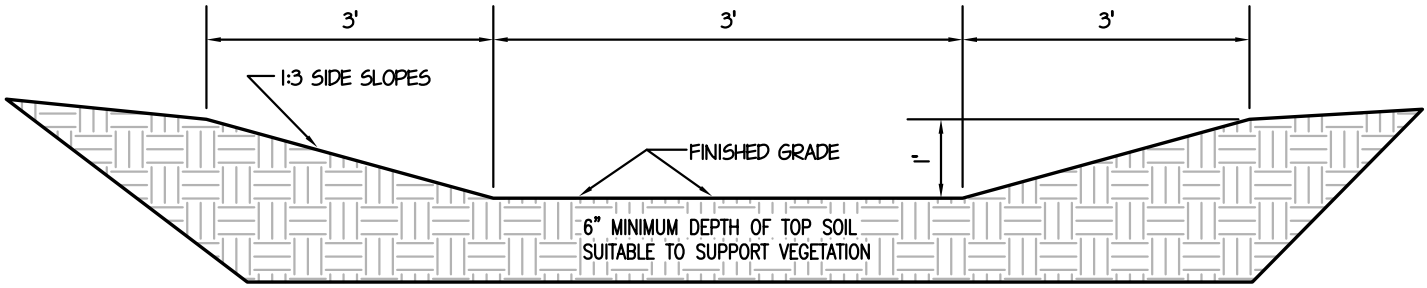

NOTES: 1. PLACE PERMANENT SEEDING IMMEDIATELY AFTER FINISHED GRADING IS COMPLETE.

THE SEED MIXTURE FOR THIS PROJECT SHALL BE SEED AS FOLLOWS:

SEED DESCRIPTION	PERCENT (BY WEIGHT)
KENTUCKY BLUE GRASS	40 TO 50
CREEPING RED FESCUE	40 TO 45
PERENNIAL RYE	5 TO 10

IT SHALL BE APPLIED AT A RATE OF 218 POUNDS PER ACRE (5 POUNDS PER 1,000 SQUARE FEET.) SEED MIXTURE SHALL NOT CONTAIN MORE THAN 5% INERT MATTER AND CONTAIN NO OBJECTIONAL WEEDS.

BATESVILLE STORM WATER

STORM WATER DETAILS

GRASS SWALE

SCALE: NONE	DATE: AUG. 2004	DWG. NO. M-3

INDOT DRAWINGS ADOPTED BY REFERENCE

INDOT Catch Basins

INDOT Catch Basin Type A	E 720-CBST-01
INDOT Catch Basin Type D	E 720-CBST-02
INDOT Catch Basin Type E	E 720-CBST-03
INDOT Catch Basin Type J	E 720-CBST-04
INDOT Catch Basin Type K	E 720-CBST-05
INDOT Catch Basin Pipe	E 720-CBST-06
INDOT Catch Basin Type S	E 720-CBST-07
INDOT Catch Basin Type W	E 720-CBST-08
INDOT Catch Basin Hood	E 720-CBST-09

INDOT Inlet & Catch Basin Castings

INDOT Pipe Catch Basin Casting	E 720-CBCA-01
INDOT Compatibility of Drainage Structures and Castings	E 720-CDSC-01
INDOT Earth Ditch Casting Type 7	E 720-EDCA-01
INDOT Casting Type 5 Frame	E 720-ICCA-01
INDOT Casting Type 5 Alternate Bolted Frame	E 720-ICCA-02
INDOT Casting Type 5 (Alternate) Frame and Grate	E 720-ICCA-03
INDOT Casting Type 8 Frame	E 720-ICCA-04
INDOT Casting Type 8 Grate	E 720-ICCA-05
INDOT Casting Type 8 Curb Box	E 720-ICCA-06
INDOT Casting Type 10 Frame	E 720-ICCA-08
INDOT Casting Type 10 Grate	E 720-ICCA-09
INDOT Casting Type 10 Curb Box	E 720-ICCA-09A
INDOT Steel Grating Type 12 Frame and Grate	E 720-ICCA-10
INDOT Casting Type 12 (Alternate) Frame and Grate	E 720-ICCA-11
INDOT Steel Grating Type 12A Frame and Grate	E 720-ICCA-12
INDOT Casting Type 13 Frame and Grate	E 720-ICCA-13
INDOT Casting Type 14 Frame and Grate	E 720-ICCA-15
INDOT Casting Type 15 Frame and Grate	E 720-ICCA-16
INDOT Casting Type 15 Grate	E 720-ICCA-17
INDOT Casting Type 15 Curb Box	E 720-ICCA-18
INDOT Casting Type 15 (Alternate) Frame, Grate and Curb Box	E 720-ICCA-19
INDOT Inlet Casting Type 6	E 720-INCA-01
INDOT Curb Inlet Casting Type 3	E 720-INCA-02

INDOT Pipe End Sections

INDOT Metal Pipe End Section	E 715-MPES-01
INDOT Metal Pipe Arch End Section	E 715-MPES-02
INDOT Metal Pipe End Section Connections	E 715-MPES-03
INDOT Precast Concrete End Section	E 715-PCES-01

INDOT Inlet Structures

INDOT Inlet Type A	E 720-INST-01
INDOT Inlets Type B and C	E 720-INST-02
INDOT Inlet Type D	E 720-INST-03
INDOT Inlets Type E and F	E 720-INST-04
INDOT Inlet Type G	E 720-INST-05
INDOT Inlet Type J	E 720-INST-06
INDOT Inlets Type M and R	E 720-INST-07
INDOT Inlet Type N	E 720-INST-08
INDOT Inlet Type P	E 720-INST-09
INDOT Inlets Type S and T	E 720-INST-10

INDOT Manhole Castings

INDOT Flat Top Grate Casting Type 2	E 720-MHCA-01
INDOT Manhole Casting Type 4 Ring and Cover	E 720-MHCA-02
INDOT Manhole Casting Type 4 Alternate Cover	E 720-MHCA-03

INDOT Manhole Structures

INDOT Manholes Type A and B	E 720-MHST-01
INDOT Manhole Type C	E 720-MHST-02
INDOT Manholes Drop Manhole Type C	E 720-MHST-03
INDOT Manholes Type D, E, F and G	E 720-MHST-04
INDOT Manholes Type H, J, K, L, M and N	E 720-MHST-05
INDOT Precast Concrete Manhole Sections	E 720-MHST-06
INDOT Precast Concrete Manhole Bottom Section	E 720-MHST-07
INDOT Manhole Bars and Concentric Cone	E 720-MHST-08
INDOT Manhole Step	E 720-MHST-09
INDOT Table of Reinforcing Steel for Manholes	E 720-MHST-10

INDOT Slotted Drains

INDOT Slotted Drain Pipe	E 715-SLDR-01
INDOT Slotted Drain Pipe	E 715-SLDR-02
INDOT Slotted Vane Drain Pipe	E 715-SLDR-03
INDOT Slotted Drain Pipe Cleanout Port	E 720-SDCP-01
INDOT Casting Type I Frame and Grate	E 720-SDCP-02
INDOT Casting Type II Frame and Grate	E 720-SDCP-03