GENERAL NOTES

1. Brick, block, or concrete may be used.
2. Precast catch basin type W may be substituted for catch basin type A.
3. (3) 2" dia. pipe drain from bottom of curb to inlet. Aggregate to be placed around inlet end of pipe.
4. (4) 3" dia. pipe to be kept open for drainage of subgrade or base until surface is placed.
5. Reinforcement required if Dim. A < 2'-6. Reinforcement not required if Dim. A ≥ 2'-6.

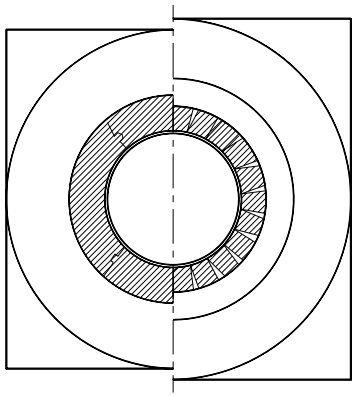

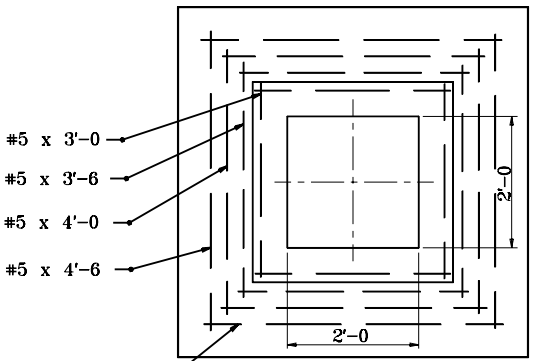

#5 ea. layer

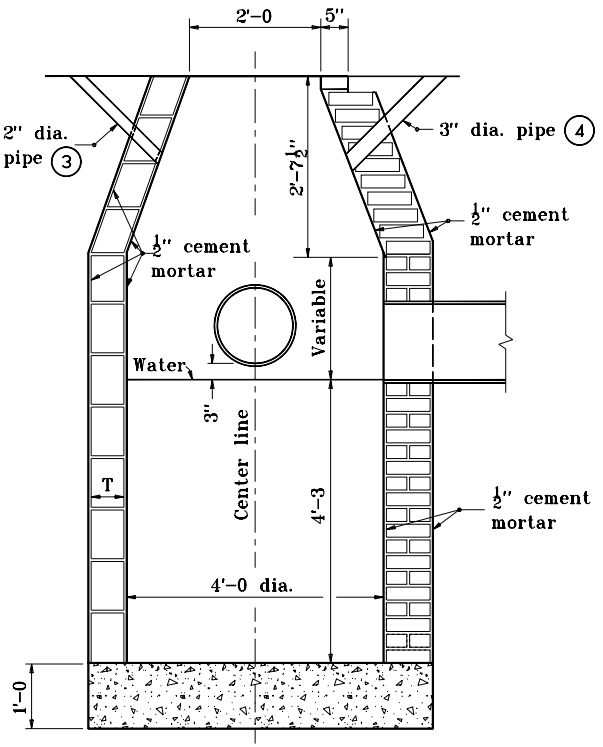

BRICK OR BLOCK

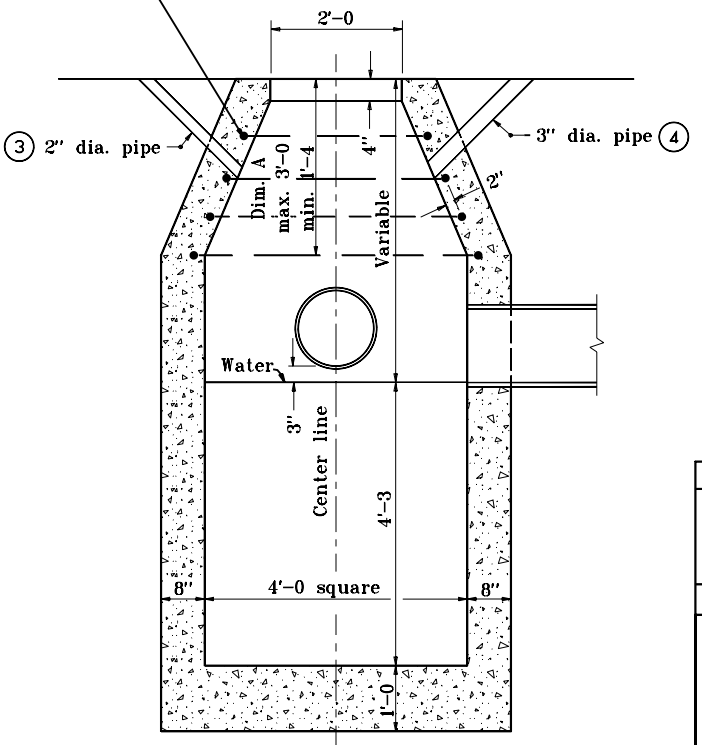

CONCRETE

INDIANA DEPARTMENT OF TRANSPORTATION

CATCH BASIN TYPE A

SEPTEMBER 1997

STANDARD DRAWING NO. E 720-CBST-01

ANTHONY L. UREMOVICH REGISTERED No. 18095 STATE OF INDIANA PROFESSIONAL ENGINEER

DESIGN STANDARDS ENGINEER

DETAILS PLACED IN THIS FORMAT	11-15-99
/s/ Anthony L. Uremovich DESIGN STANDARDS ENGINEER	11-15-99 DATE
/s/ Firooz Zandi CHIEF HIGHWAY ENGINEER	11-15-99 DATE
ORIGINALLY APPROVED	9-02-97

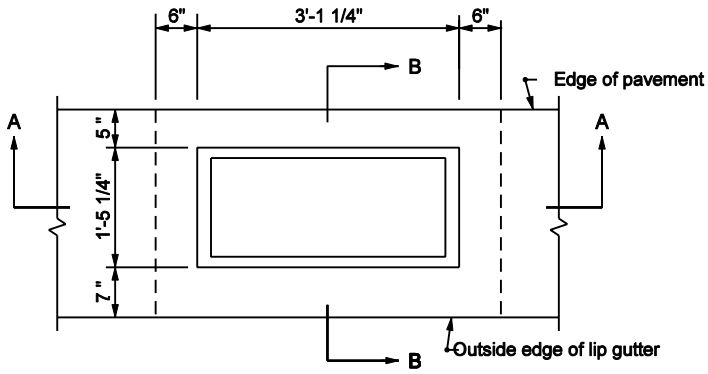

PLAN

NOTES

1. These dimensions may be increased or decreased by 1'-0", as directed.

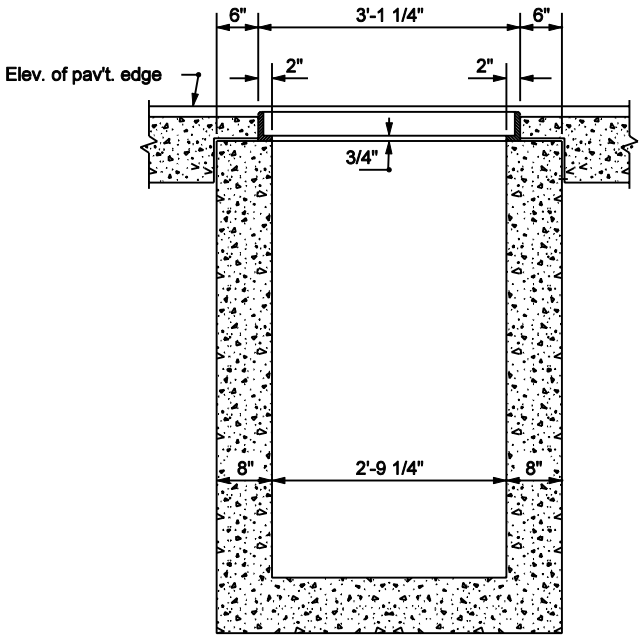

SECTION A-A

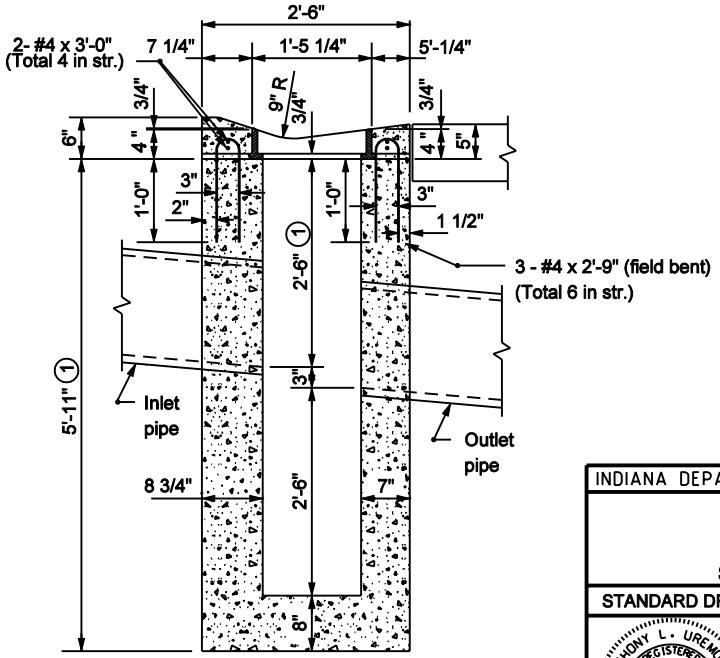

SECTION B-B

INDIANA DEPARTMENT OF TRANSPORTATION

CATCH BASIN
TYPE D

SEPTEMBER 2003

STANDARD DRAWING NO. E 720-CBST-02

ANTHONY L. UREMOVICH REGISTERED No. 18095 STATE OF INDIANA PROFESSIONAL ENGINEER

DESIGN STANDARDS ENGINEER

/s/ Anthony L.Uremovich 3-02-03
DESIGN STANDARDS ENGINEER DATE

/s/ Richard K.Smutzer 3-02-03
CHIEF HIGHWAY ENGINEER DATE

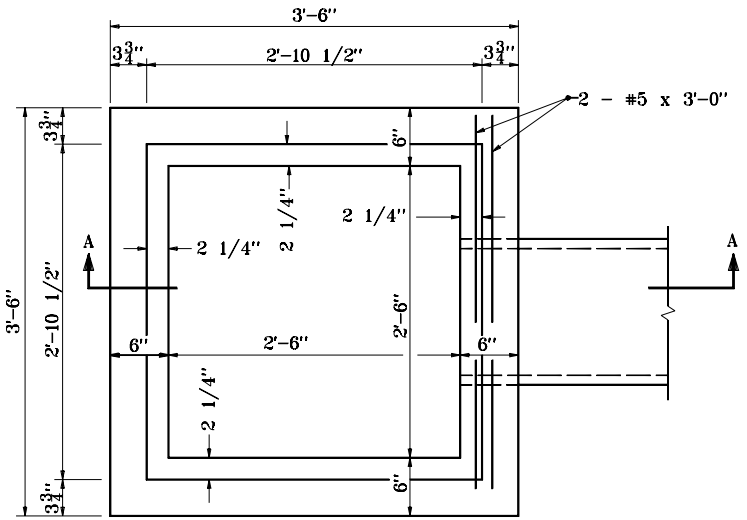

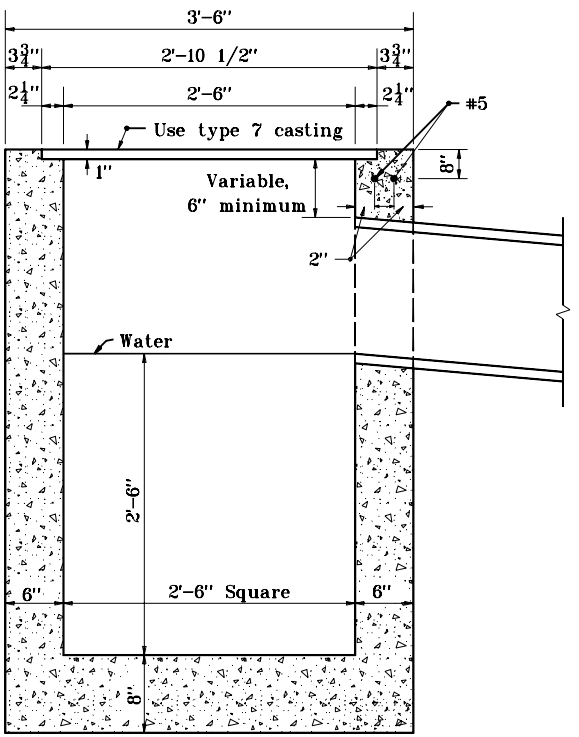

SECTION A-A

INDIANA DEPARTMENT OF TRANSPORTATION

CATCH BASIN
TYPE E

SEPTEMBER 1997

STANDARD DRAWING NO. **E 720-CBST-03**

ANTHONY L. UREMOVICH REGISTERED No. 18095 STATE OF INDIANA PROFESSIONAL ENGINEER

DESIGN STANDARDS ENGINEER

DETAILS PLACED IN THIS FORMAT	11-15-99
/s/ Anthony L. Uremovich DESIGN STANDARDS ENGINEER	11-15-99 DATE
/s/ Firooz Zandi CHIEF HIGHWAY ENGINEER	11-15-99 DATE
ORIGINALLY APPROVED	9-01-97

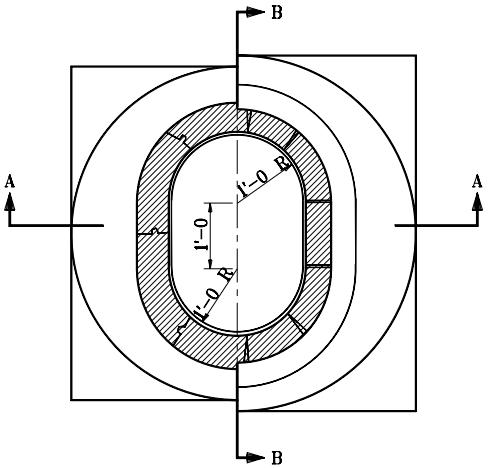

GENERAL NOTES

1. T = 8" for brick structure
   T = 6" for segmental block structure
2. 2" pipe drain from bottom of curb to inlet. Aggregate to be placed around inlet end of pipe.
3. 3" min. dia. pipe to be kept open for drainage of subgrade or base until surface is placed.

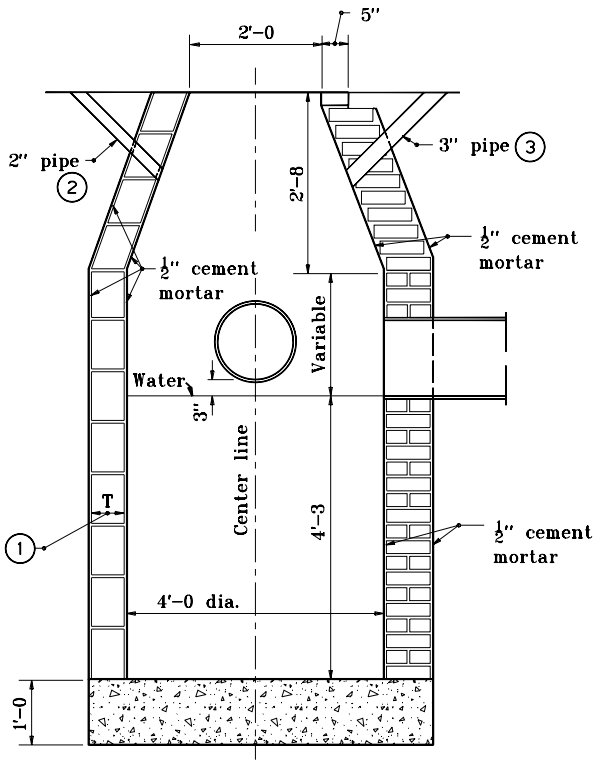

SECTION A-A

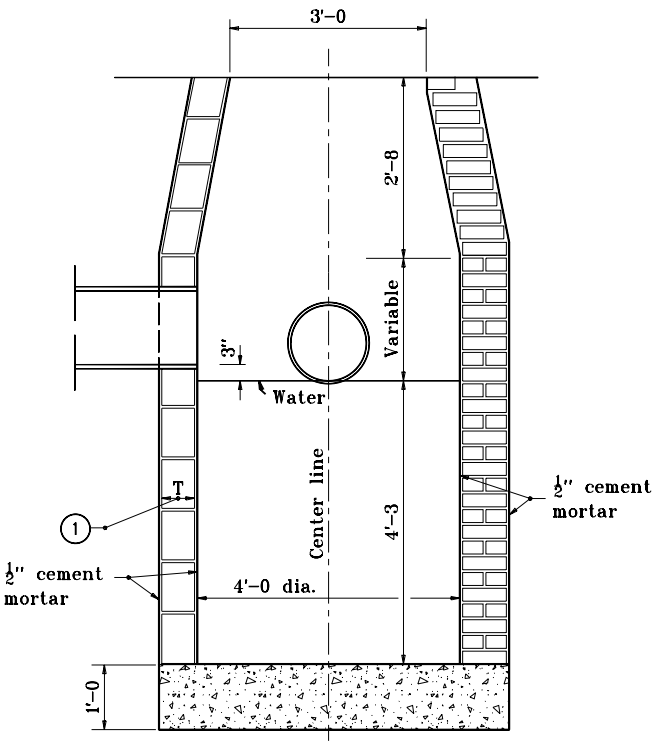

SECTION B-B

INDIANA DEPARTMENT OF TRANSPORTATION

CATCH BASIN
TYPE J

APRIL 1995

STANDARD DRAWING NO. **E 720-CBST-04**

ANTHONY L. UREMOVICH REGISTERED No. 18095 STATE OF INDIANA PROFESSIONAL ENGINEER

DESIGN STANDARDS ENGINEER

DETAILS PLACED IN THIS FORMAT	11-15-99
/s/ Anthony L. Uremovich DESIGN STANDARDS ENGINEER	11-15-99 DATE
/s/ Firooz Zandi CHIEF HIGHWAY ENGINEER	11-15-99 DATE
ORIGINALLY APPROVED	4-03-95

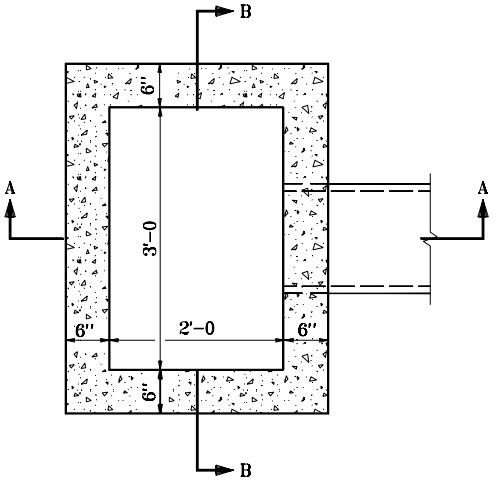

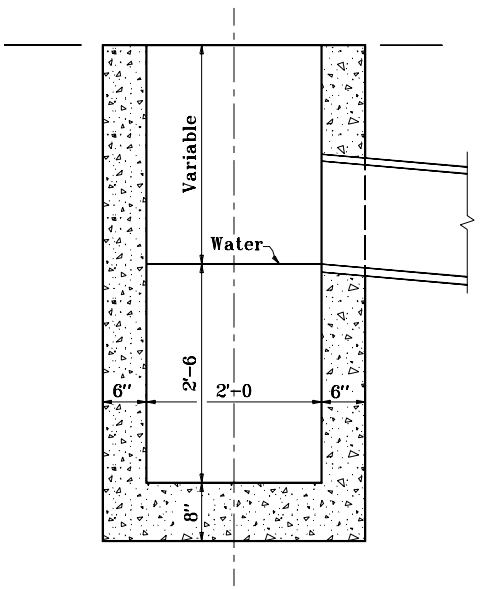

SECTION A-A

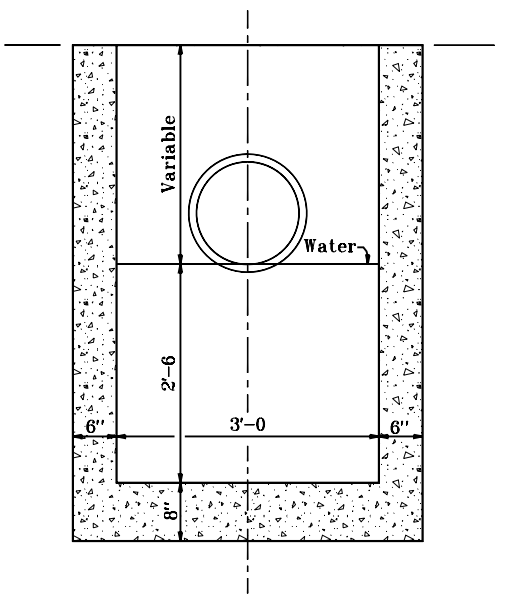

SECTION B-B

INDIANA DEPARTMENT OF TRANSPORTATION

CATCH BASIN
TYPE K

APRIL 1995

STANDARD DRAWING NO. **E 720-CBST-05**

ANTHONY L. UREMOVICH REGISTERED No. 18095 STATE OF INDIANA PROFESSIONAL ENGINEER

DESIGN STANDARDS ENGINEER

DETAILS PLACED IN THIS FORMAT	11-15-99
/s/ Anthony L. Uremovich DESIGN STANDARDS ENGINEER	11-15-99 DATE
/s/ Firooz Zandi CHIEF HIGHWAY ENGINEER	11-15-99 DATE
ORIGINALLY APPROVED	4-03-95

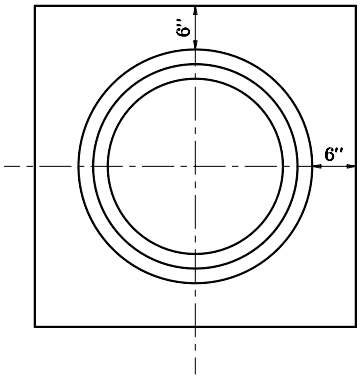

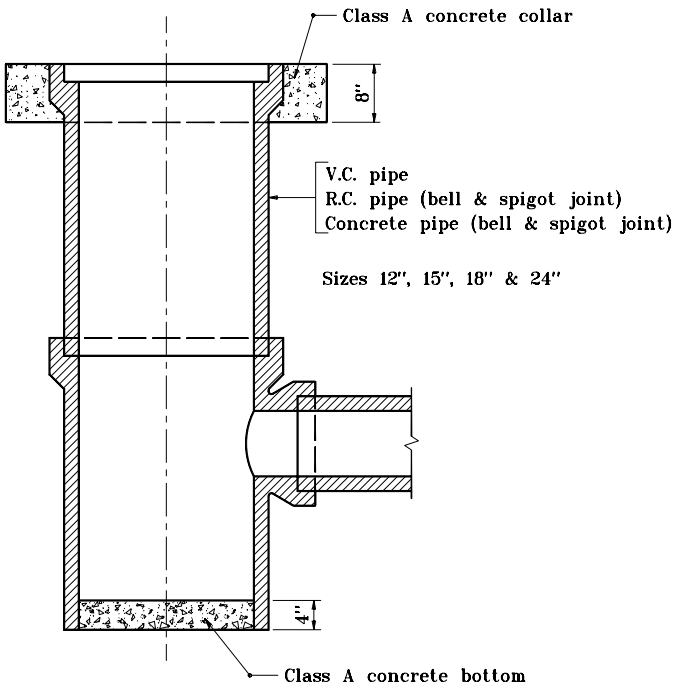

INDIANA DEPARTMENT OF TRANSPORTATION

CATCH BASIN PIPE

APRIL 1995

STANDARD DRAWING NO. **E 720-CBST-06**

ANTHONY L. UREMOVICH REGISTERED No. 18095 STATE OF INDIANA PROFESSIONAL ENGINEER

DESIGN STANDARDS ENGINEER

DETAILS PLACED IN THIS FORMAT	11-15-99
/s/ Anthony L. Uremovich DESIGN STANDARDS ENGINEER	11-15-99 DATE
/s/ Firooz Zandi CHIEF HIGHWAY ENGINEER	11-15-99 DATE
ORIGINALLY APPROVED	4-03-95

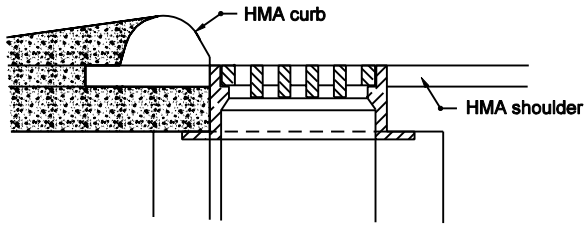

PLACEMENT DETAIL FOR CASTING

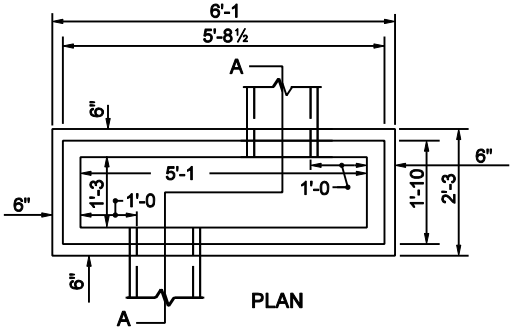

CATCH BASIN TYPE S

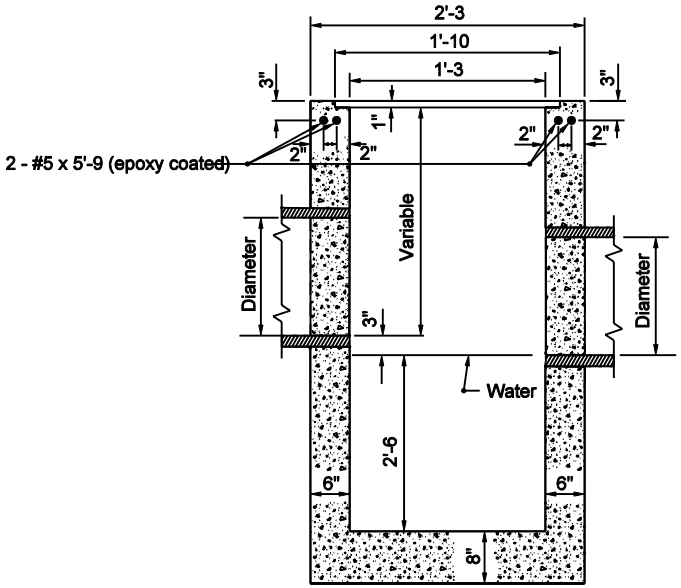

SECTION A-A

INDIANA DEPARTMENT OF TRANSPORTATION

CATCH BASIN
TYPE S

SEPTEMBER 2003

STANDARD DRAWING NO. E 720-CBST-07

RICHARD L. VanCLEAVE
REGISTERED
No. 9750
STATE OF INDIANA
PROFESSIONAL ENGINEER

DESIGN STANDARDS ENGINEER

/s/ Richard L. VanCleave 9-02-03
DESIGN STANDARDS ENGINEER DATE

/s/ Richard K. Smutzer 9-02-03
CHIEF HIGHWAY ENGINEER DATE

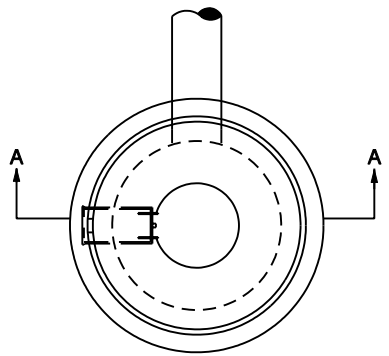

NOTES:

1. Concentric concrete section will not be permited on any manhole that will be under the jurisdiction of the Indianapolis Sanitary District
2. The contractor will be premitted to substitute precast catch basin type "W" for catch basin type "A".

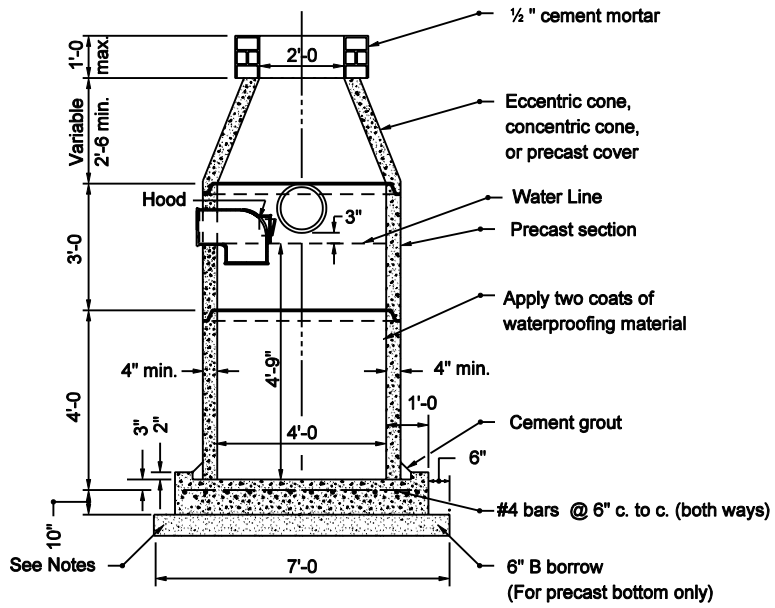

SECTION A-A

INDIANA DEPARTMENT OF TRANSPORTATION

CATCH BASIN
TYPE W

SEPTEMBER 2003

STANDARD DRAWING NO. E 720-CBST-08

RICHARD L. VanCLEAVE REGISTERED No. 9750 STATE OF INDIANA PROFESSIONAL ENGINEER

DESIGN STANDARDS ENGINEER

/s/ Richard L. VanCleave 9-02-03
DESIGN STANDARDS ENGINEER DATE

/s/ Richard K. Smutzer 9-02-03
CHIEF HIGHWAY ENGINEER DATE

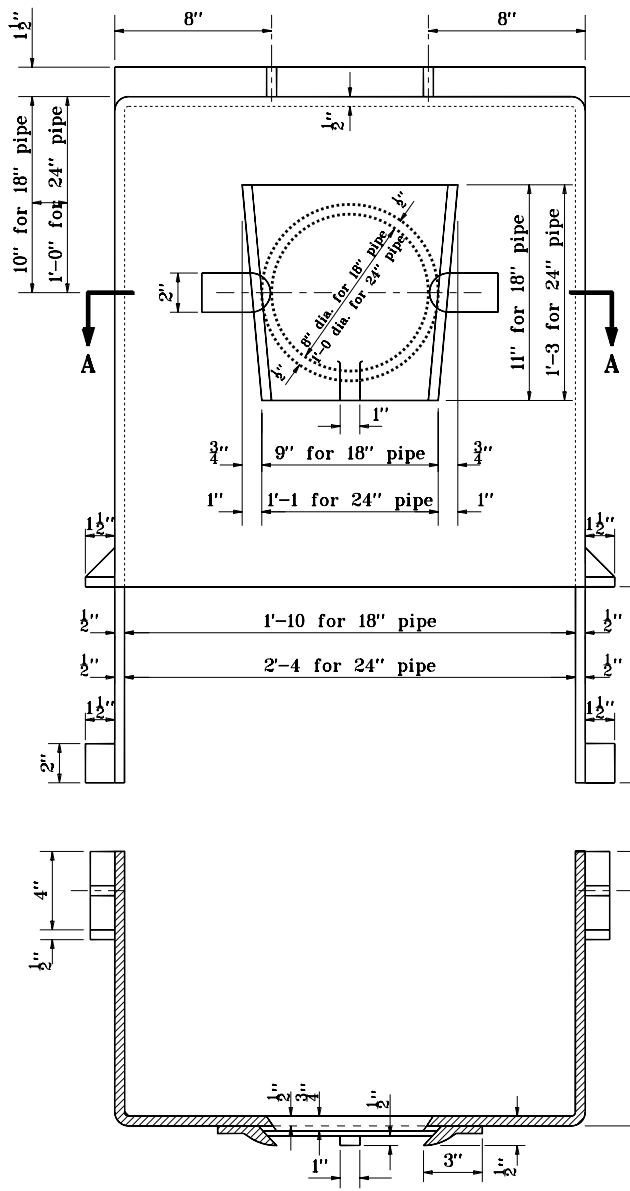

SECTION A–A
FOR 18" & 24" PIPE

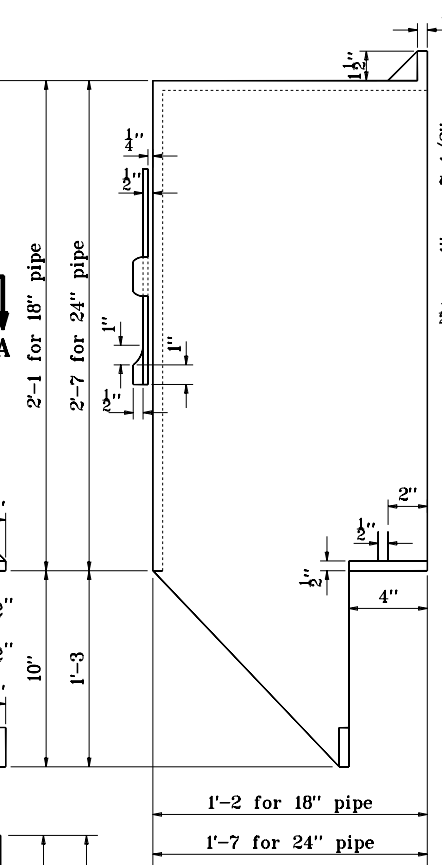

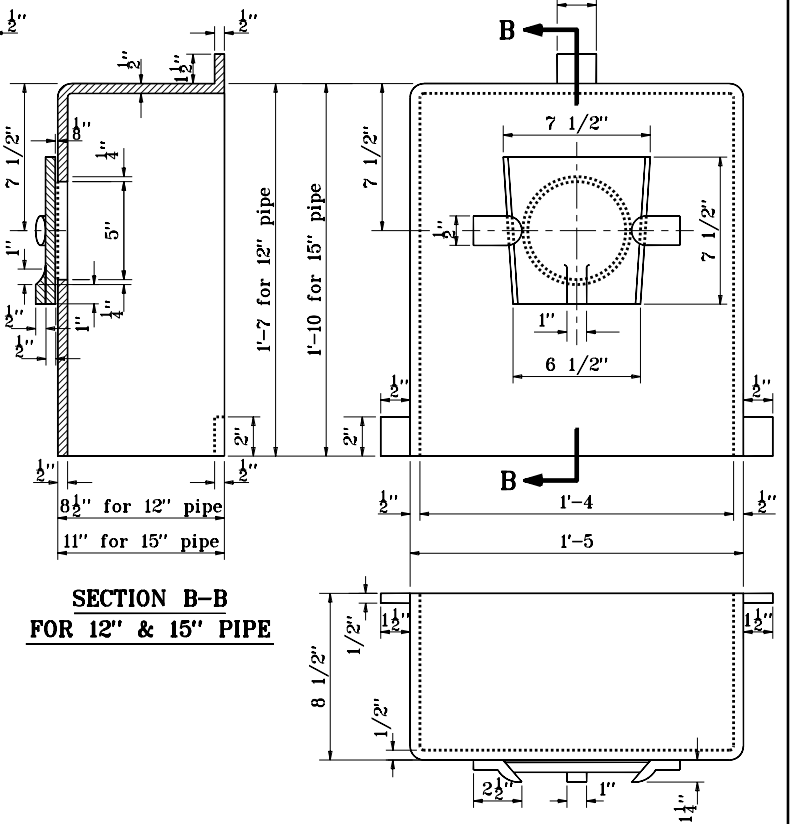

SECTION B–B
FOR 12" & 15" PIPE

GENERAL NOTES

1. Hoods may be cast in one piece or may be built up of electrically welded 1/2" steel plates. All hoods shall be gas tight. Steel hoods shall be painted with waterproofing asphalt.

2. Hoods shall be omitted on earth ditch type catch basin unless otherwise specified.

INDIANA DEPARTMENT OF TRANSPORTATION

CATCH BASIN HOOD

MAY 1998

STANDARD DRAWING NO. E 720-CBST-09

ANTHONY L. UREMOVICH REGISTERED No. 18095 STATE OF INDIANA PROFESSIONAL ENGINEER

DESIGN STANDARDS ENGINEER

DETAILS PLACED IN THIS FORMAT	11-15-99
/s/ Anthony L. Uremovich DESIGN STANDARDS ENGINEER	11-15-99 DATE
/s/ Firooz Zandi CHIEF HIGHWAY ENGINEER	11-15-99 DATE
ORIGINALLY APPROVED	5-01-98