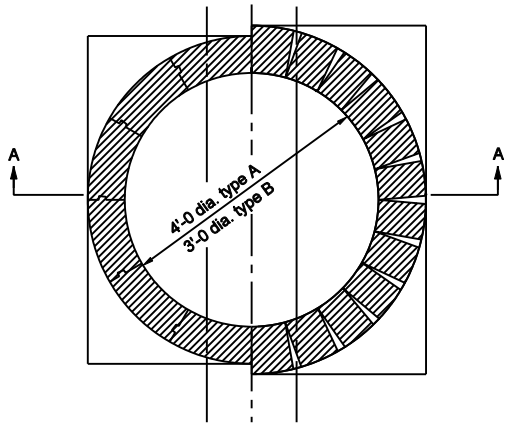

SECTION B-B

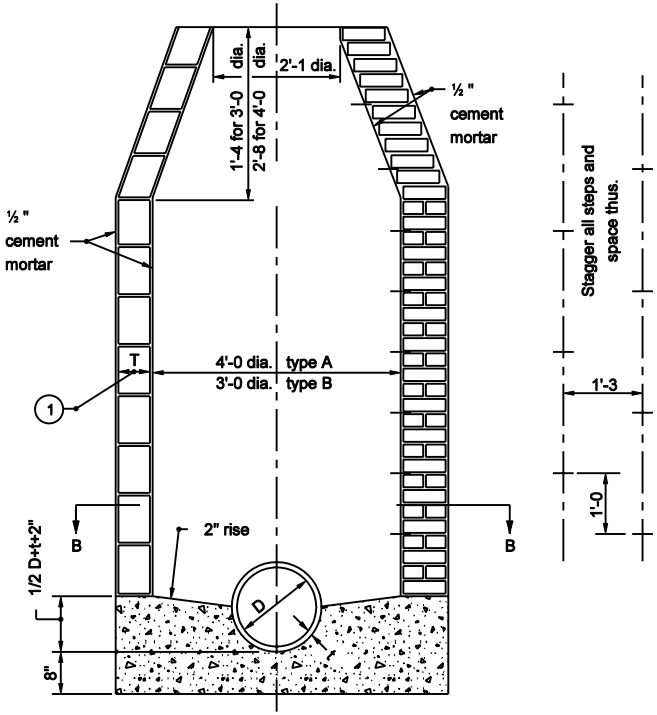

SECTION A-A

TYPE A
Dia. = 4'-0"

TYPE B
Dia. = 3'-0

NOTES

1. T = 8" for brick structure
   T = 6" for segmental block structure

INDIANA DEPARTMENT OF TRANSPORTATION

MANHOLES TYPE A AND B

SEPTEMBER 2003

STANDARD DRAWING NO. E 720-MHST-01

RICHARD L. VanCLEAVE REGISTERED No. 9750 STATE OF INDIANA PROFESSIONAL ENGINEER

DESIGN STANDARDS ENGINEER

/s/ Richard L. VanCleave 9-02-03
DESIGN STANDARDS ENGINEER DATE

/s/ Richard K. Smutzer 9-02-03
CHIEF HIGHWAY ENGINEER DATE

GENERAL NOTES

(1) For eccentric and concentric cone heights see cone heights table on Standard Drawing E 720-MHST-08.

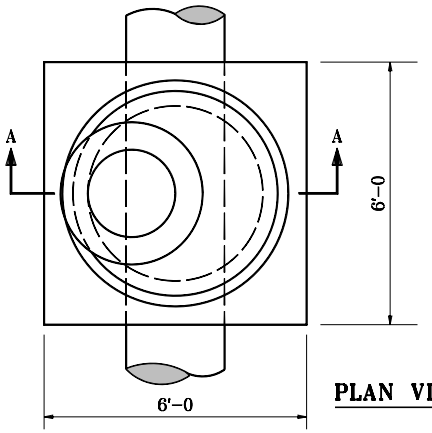

PLAN VIEW

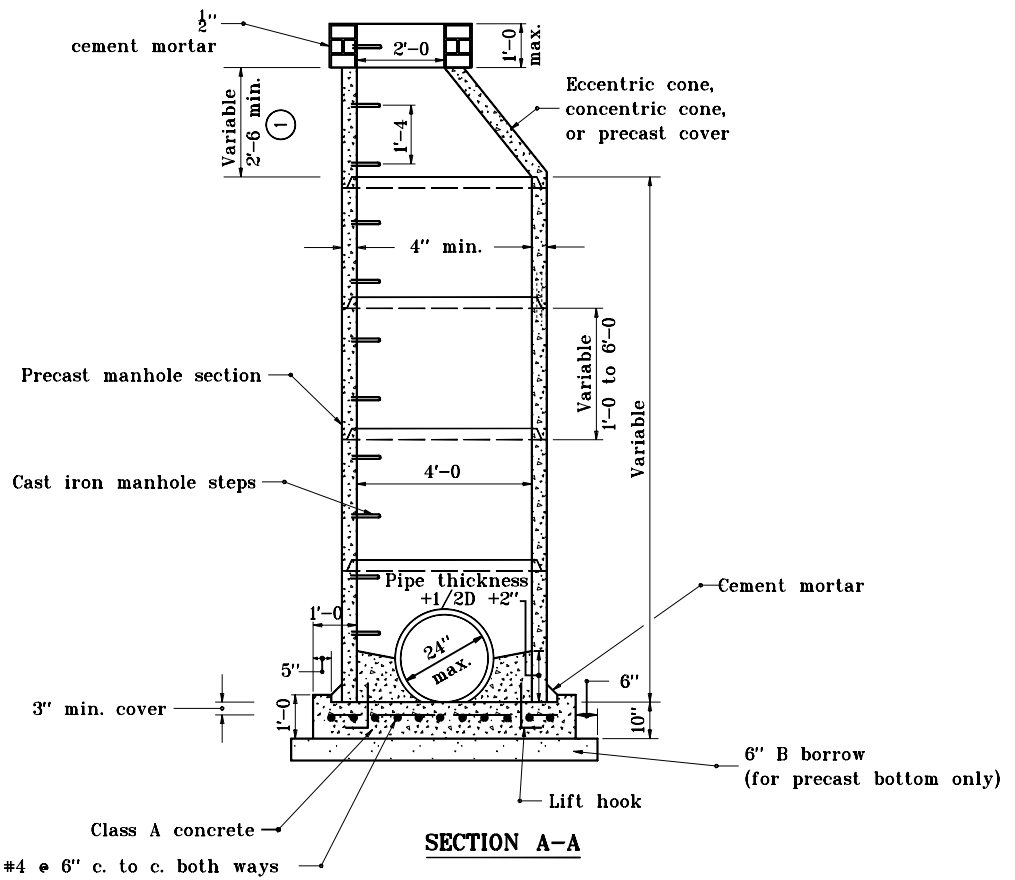

SECTION A-A

INDIANA DEPARTMENT OF TRANSPORTATION		
MANHOLE TYPE C		
SEPTEMBER 1997		
STANDARD DRAWING NO. E 720-MHST-02		
ANTHONY L. UREMOVICH REGISTERED No. 18095 STATE OF INDIANA PROFESSIONAL ENGINEER	DETAILS PLACED IN THIS FORMAT	11-15-99
	/s/ Anthony L. Uremovich DESIGN STANDARDS ENGINEER	11-15-99 DATE
	/s/ Firooz Zandi CHIEF HIGHWAY ENGINEER	11-15-99 DATE
DESIGN STANDARDS ENGINEER	ORIGINALLY APPROVED	9-02-97

NOTES

1. Drop pipe may be used with manhole type D, E, F, or G. Such manhole shall be referred to as drop manhole type D, E, F, or G.

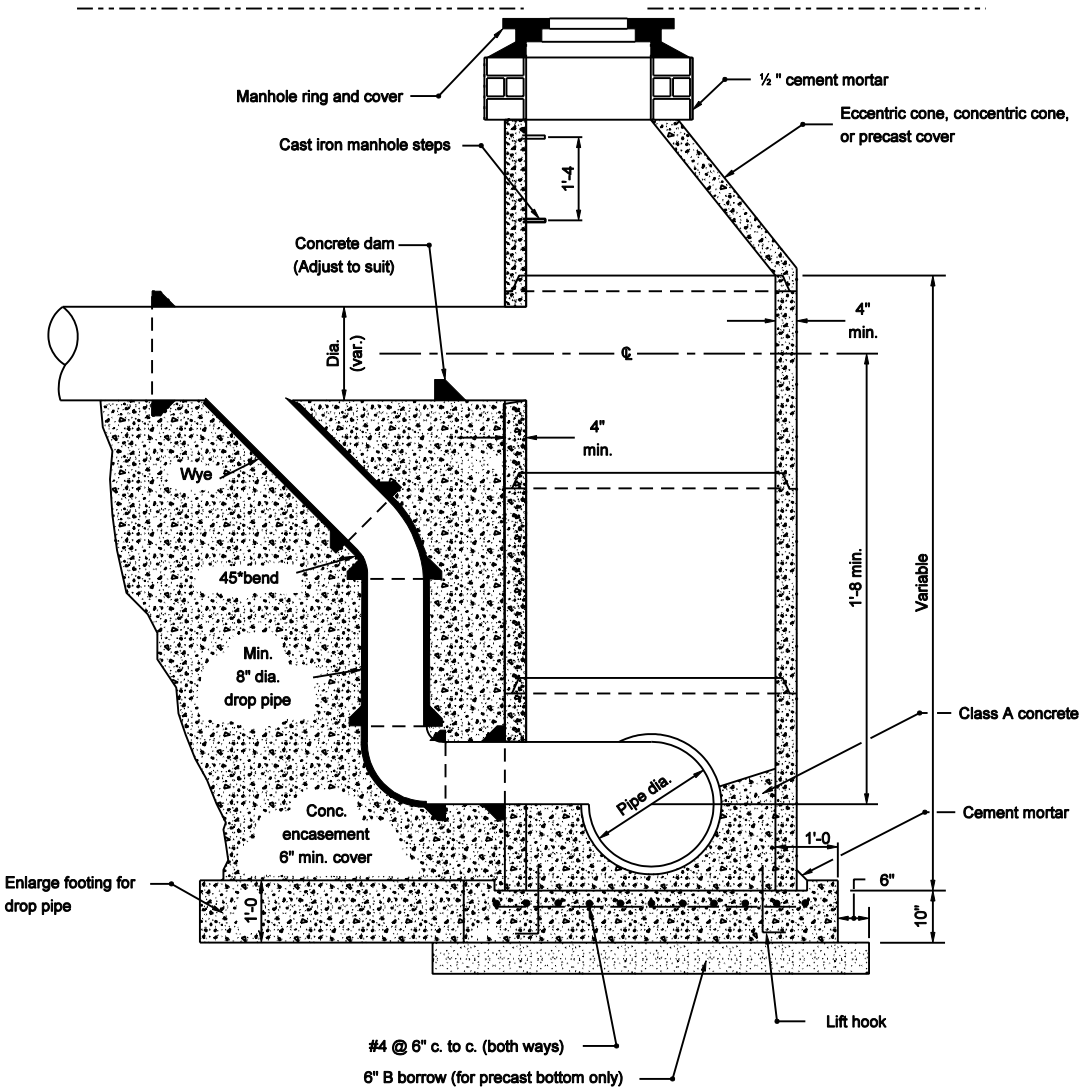

SECTION

INDIANA DEPARTMENT OF TRANSPORTATION

DROP MANHOLE TYPE C

SEPTEMBER 2003

STANDARD DRAWING NO. E 720-MHST-03

RICHARD L. VanCLEAVE REGISTERED No. 9750 STATE OF INDIANA PROFESSIONAL ENGINEER

DESIGN STANDARDS ENGINEER

/s/ Richard L. VanCleave 9-02-03
DESIGN STANDARDS ENGINEER DATE

/s/ Richard K. Smutzer 9-02-03
CHIEF HIGHWAY ENGINEER DATE

MANHOLE DIMENSIONS		
TYPE	A-1 PIPE SIZE DIA. (in)	B AND D
D	27 to 42	4'-9
E	48 to 60	6'-6
F	66 to 84	8'-10
G	90 to 108	11'-2

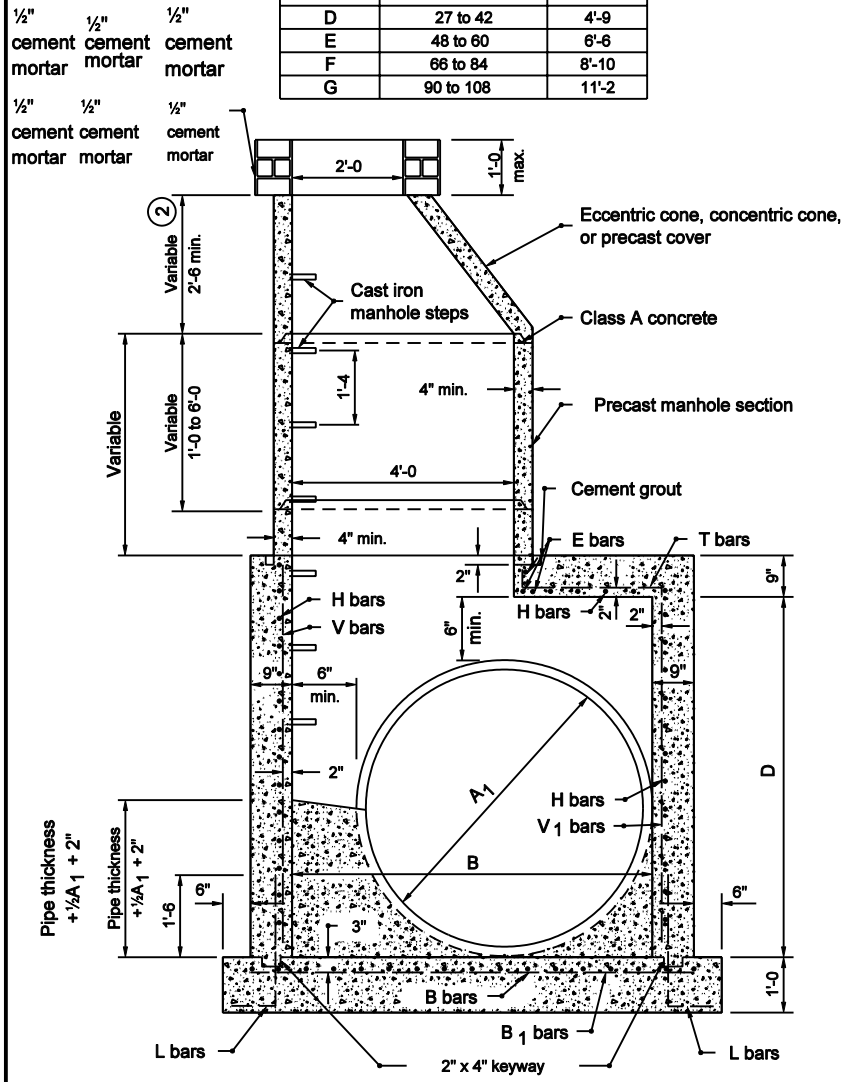

SECTION A-A

NOTES

1. Manhole type H, J, K, L, M, or N, may be substituted for manhole type C, D, E, or F for comparable pipe sizes. See Standard Drawing E 720-MHST-05 for manholes type H, J, K, L, M, and N details.

2. For eccentric and concentric cone heights see Cone Heights Table on Standard Drawing 720-MHST-08.

3. See Standard Drawing 720-MHST-10 for Reinforcing Steel for Manholes table.

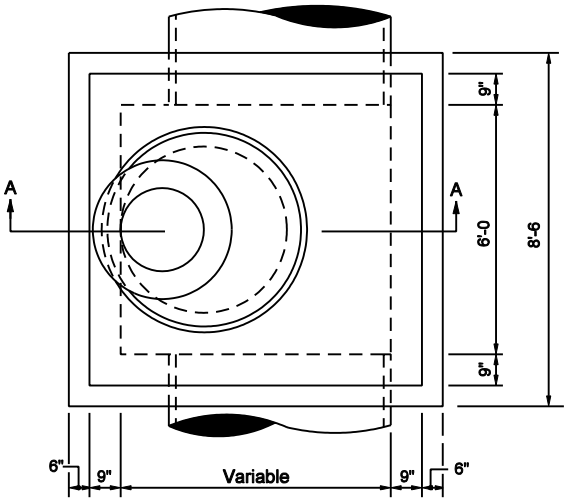

PLAN VIEW

INDIANA DEPARTMENT OF TRANSPORTATION

MANHOLES
TYPE D, E, F, AND G

SEPTEMBER 2003

STANDARD DRAWING NO. E 720-MHST-04

RICHARD L. VanCLEAVE REGISTERED No. 9750 STATE OF INDIANA PROFESSIONAL ENGINEER

DESIGN STANDARDS ENGINEER

/s/ Richard L. VanCleave 9-02-03
DESIGN STANDARDS ENGINEER DATE

/s/ Richard K. Smutzer 9-02-03
CHIEF HIGHWAY ENGINEER DATE

MANHOLE PIPE SIZES				
Type	G (in.)	F (ft. in.)	Maximum Pipe Size Rt. ∡ to Mainline (in.)	Maximum Pipe Size for Mainline (in.)
H	24 to 36	——	30	36
J	24 to 36	5'-0	30	36
K	36 to 48	6'-0	36	48
L	48 to 54	8'-0	48	54
M	54 to 72	8'-6	66	72
N	72 to 84	9'-0	72	84

NOTES

1. Drop pipe may be used with manholes Type H, J, K, L, M, or N. Such manhole shall be referred to as drop manholes type H, J, K, L, M, or N. For details of construction see Standard Drawing E 720-MHST-03.

(2) See Standard Drawing E 720-MHST-06 for Details A, B, and C.

(3) Manholes type C, D, E, or F. may be substituted for manholes type H, J, K, L, M, or N. for comparable pipe sizes. See Standard Drawings E 720-MHST-02 and -04 for manholes type D, E, F, and G details..

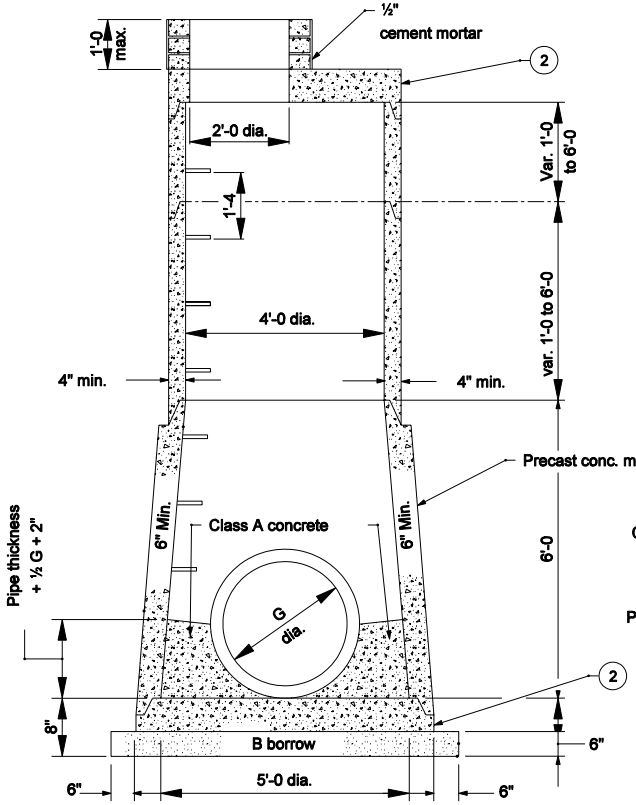

MANHOLE TYPE H

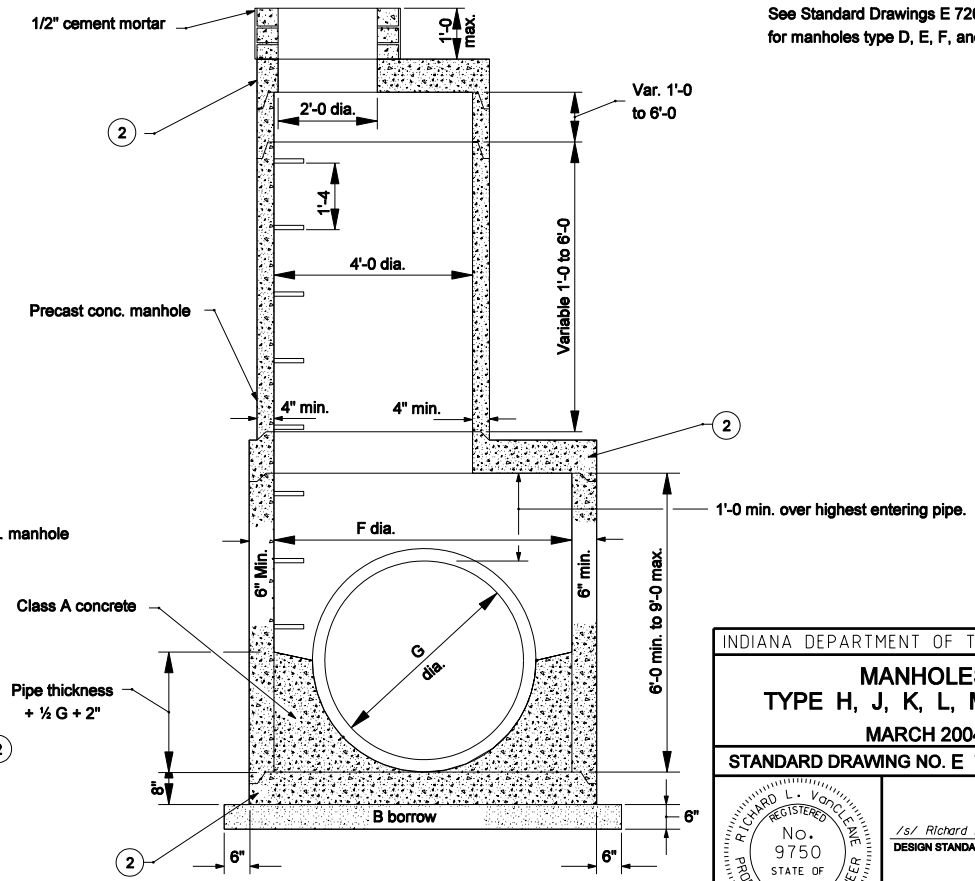

MANHOLE TYPE J,K,L,M & N

INDIANA DEPARTMENT OF TRANSPORTATION

MANHOLES TYPE H, J, K, L, M, AND N

MARCH 2004

STANDARD DRAWING NO. E 720-MHST-05

RICHARD L. VanCLEAVE REGISTERED No. 9750 STATE OF INDIANA PROFESSIONAL ENGINEER

DESIGN STANDARDS ENGINEER

/s/ Richard L. VanCleave 3-01-04
DESIGN STANDARDS ENGINEER DATE

/s/ Richard K. Smutzer 3-01-04
CHIEF HIGHWAY ENGINEER DATE

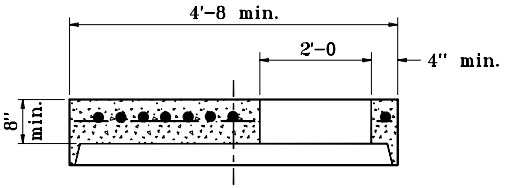

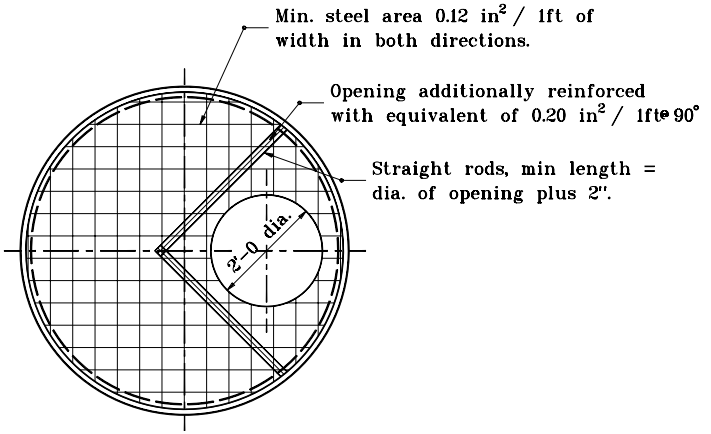

DETAIL A

COVER CAP FOR PRECAST CONCRETE MANHOLE SECTION

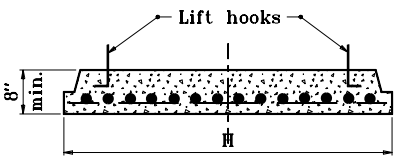

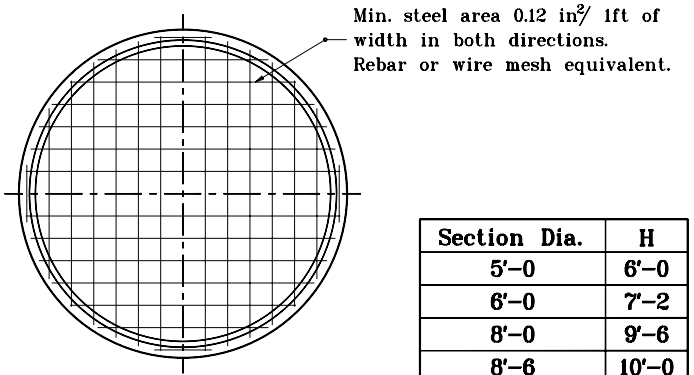

Section Dia.	H
5'-0	6'-0
6'-0	7'-2
8'-0	9'-6
8'-6	10'-0
9'-0	10'-8

DETAIL C

BASE FOR PRECAST CONCRETE MANHOLE SECTIONS (5'-0 to 9'-0 DIA.)

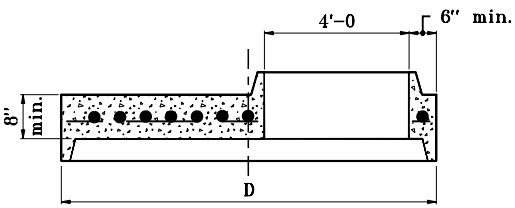

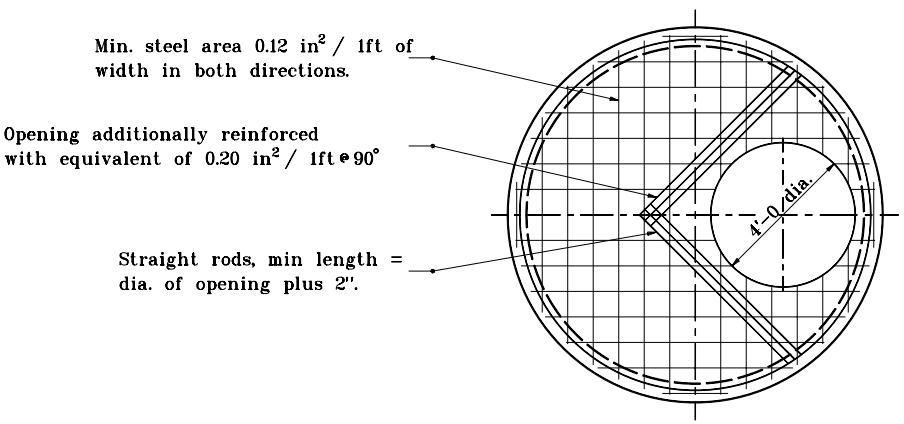

Section Dia.	D
5'-0	6'-0
6'-0	7'-2
8'-0	9'-6
8'-6	10'-0
9'-0	10'-8

DETAIL B

REDUCER CAP FOR PRECAST MANHOLE SECTION (5'-0 to 9'-0 DIA.)

INDIANA DEPARTMENT OF TRANSPORTATION

PRECAST CONCRETE MANHOLE SECTIONS

APRIL 1995

STANDARD DRAWING NO. **E 720-MHST-06**

ANTHONY L. UREMOVICH REGISTERED No. 18095 STATE OF INDIANA PROFESSIONAL ENGINEER

DESIGN STANDARDS ENGINEER

DETAILS PLACED IN THIS FORMAT 11-15-99

/s/ Anthony L. Uremovich 11-15-99
DESIGN STANDARDS ENGINEER DATE

/s/ Firooz Zandi 11-15-99
CHIEF HIGHWAY ENGINEER DATE

ORIGINALLY APPROVED 4-03-95

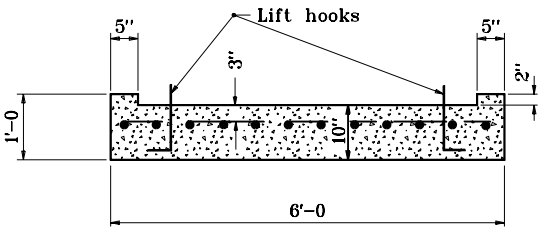

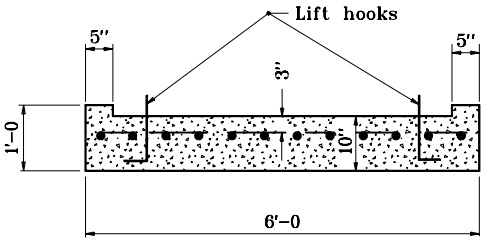

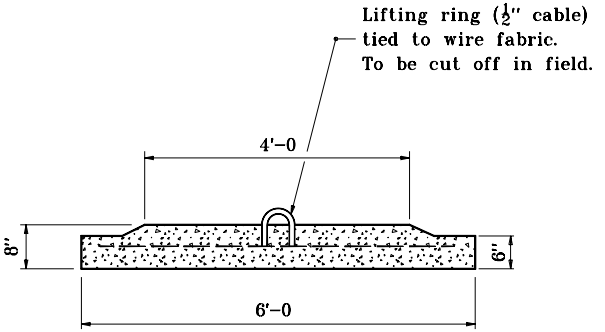

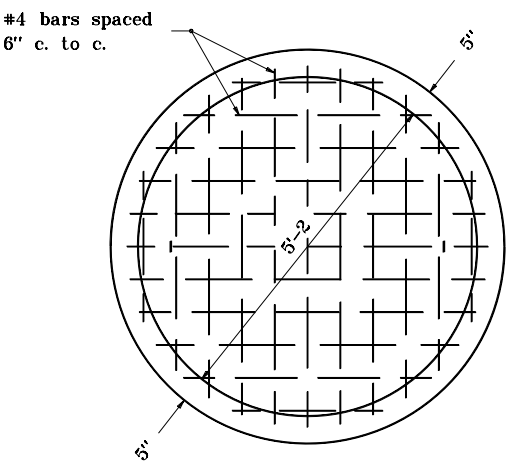

ROUND

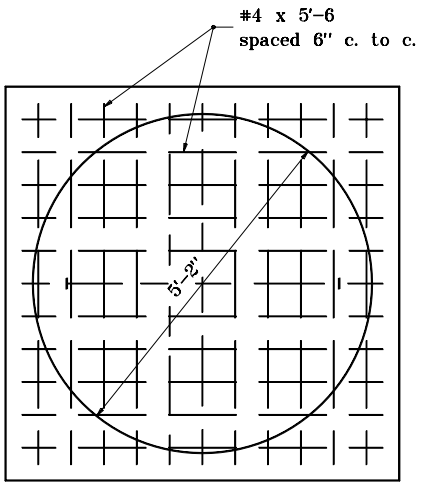

SQUARE

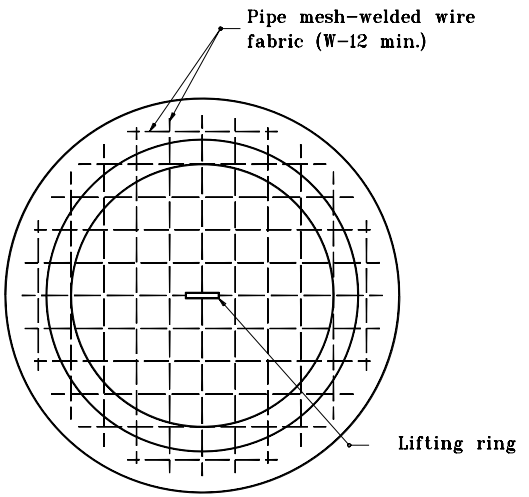

ROUND ALTERNATE

INDIANA DEPARTMENT OF TRANSPORTATION

PRECAST MANHOLE BOTTOM SECTION

SEPTEMBER 1997

STANDARD DRAWING NO. **E 720-MHST-07**

ANTHONY L. UREMOVICH REGISTERED No. 18095 STATE OF INDIANA PROFESSIONAL ENGINEER

DESIGN STANDARDS ENGINEER

DETAILS PLACED IN THIS FORMAT	11-15-99
/s/ Anthony L. Uremovich DESIGN STANDARDS ENGINEER	11-15-99 DATE
/s/ Firooz Zandi CHIEF HIGHWAY ENGINEER	11-15-99 DATE
ORIGINALLY APPROVED	9-01-97

NOTES

1. The concentric concrete section will not be permitted for manholes which are under the jurisdiction of the Indianapolis Sanitary District.

CONE HEIGHTS	
ECCENTRIC	CONCENTRIC
2'-6	2'-6
3'-0	3'-0
3'-2	3'-2
3'-6	4'-0

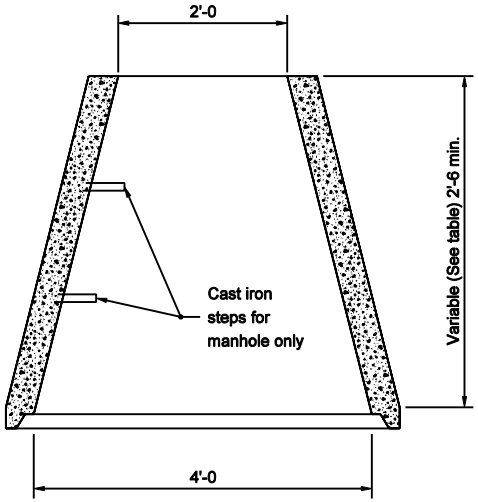

CONCENTRIC CONE

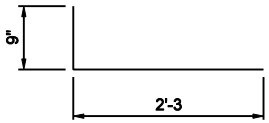

L BARS

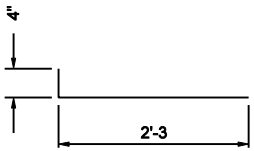

T BARS

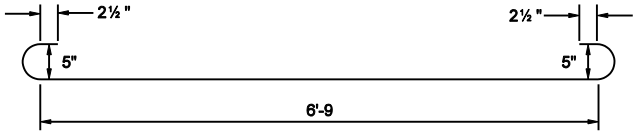

H BARS

INDIANA DEPARTMENT OF TRANSPORTATION

MANHOLE BARS AND CONECNTRIC CONE

SEPTEMBER 2003

STANDARD DRAWING NO. E 720-MHST-08

RICHARD L. VanCLEAVE REGISTERED No. 9750 STATE OF INDIANA PROFESSIONAL ENGINEER

DESIGN STANDARDS ENGINEER

/s/ Richard L. VanCleave 9-02-03
DESIGN STANDARDS ENGINEER DATE

/s/ Richard K. Smutzer 9-02-03
CHIEF HIGHWAY ENGINEER DATE

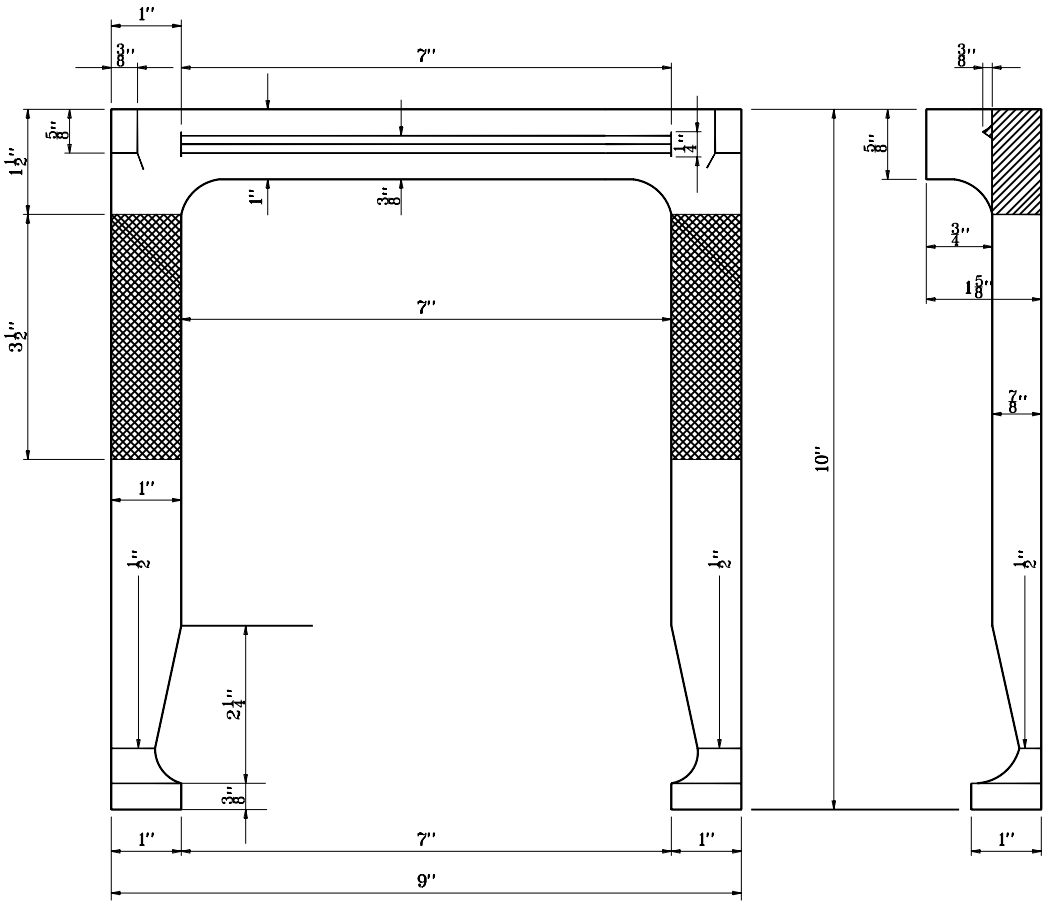

INDIANA DEPARTMENT OF TRANSPORTATION

MANHOLE STEP

APRIL 1995

STANDARD DRAWING NO. E 720-MHST-09

ANTHONY L. UREMOVICH REGISTERED No. 18095 STATE OF INDIANA PROFESSIONAL ENGINEER

DESIGN STANDARDS ENGINEER

DETAILS PLACED IN THIS FORMAT	11-15-99
/s/ Anthony L. Uremovich DESIGN STANDARDS ENGINEER	11-15-99 DATE
/s/ Firooz Zandi CHIEF HIGHWAY ENGINEER	11-15-99 DATE
ORIGINALLY APPROVED	4-03-95

REINFORCING STEEL FOR MANHOLES																
	Manhole Type D				Manhole Type E				Manhole Type F				Manhole Type G			
Bars	Length	No.	Spa.	Size	Length	No.	Spa.	Size	Length	No.	Spa.	Size	Length	No.	Spa.	Size
B	8'-0	10	9"	#5	8'-0	12	9"	#5	8'-0	16	9"	#5	8'-0	19	9"	#5
B_1	6'-9	12	9"	#5	8'-6	12	9"	#5	11'-0	12	9"	#5	13'-3	12	9"	#5
E	7'-3	3	2"	#5	7'-3	3	2"	#5	7'-3	3	2"	#5	7'-3	3	2"	#5
H	8'-6	22	6"	#5	8'-6	33	6"	#5	8'-6	41	6"	#5	8'-6	58	6"	#5
L	3'-0	16	12"	#5	3'-0	16	12"	#5	3'-0	16	12"	#5	3'-0	16	12"	#5
T	1'-3	16	6"	#5	3'-0	16	6"	#5	5'-3	16	6"	#5	7'-6	16	6"	#5
V	5'-0	16	6"	#5	6'-9	16	6"	#5	9'-0	16	6"	#5	11'-6	16	6"	#5
V_1	4'-9	16	6"	#5	6'-6	16	6"	#5	8'-9	16	6"	#5	11'-3	16	6"	#5

INDIANA DEPARTMENT OF TRANSPORTATION

TABLE OF REINFORCING STEEL FOR MANHOLES

SEPTEMBER 1997

STANDARD DRAWING NO. **E 720-MHST-10**

ANTHONY L. UREMOVICH REGISTERED No. 18095 STATE OF INDIANA PROFESSIONAL ENGINEER

DESIGN STANDARDS ENGINEER

DETAILS PLACED IN THIS FORMAT 11-15-99

/s/ Anthony L. Uremovich 11-15-99
DESIGN STANDARDS ENGINEER DATE

/s/ Firooz Zandi 11-15-99
CHIEF HIGHWAY ENGINEER DATE

ORIGINALLY APPROVED 9-02-97