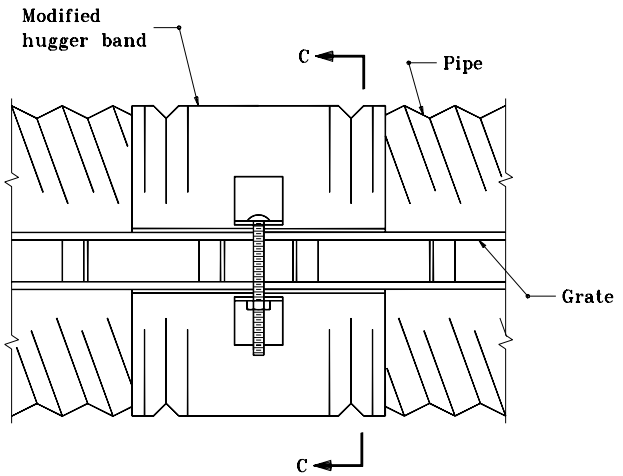

MODIFIED HUGGER BAND
TOP VIEW

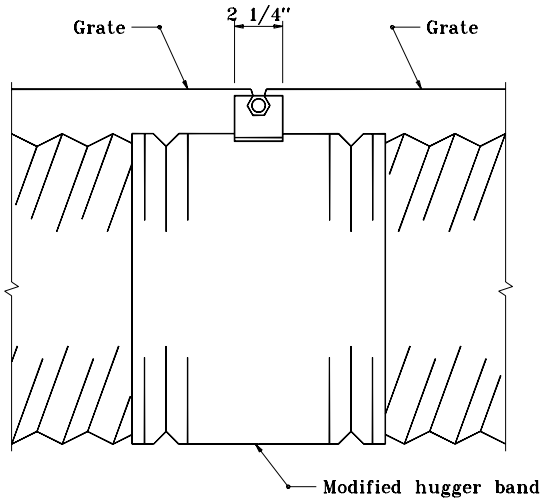

MODIFIED HUGGER BAND
SIDE VIEW

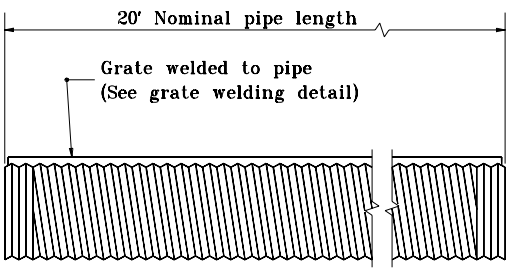

TYPICAL PIPE SECTION

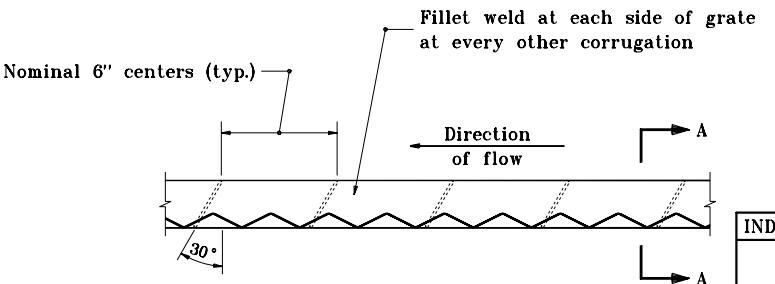

GRATE WELDING DETAIL

INDIANA DEPARTMENT OF TRANSPORTATION

SLOTTED DRAIN PIPE

APRIL 1995

STANDARD DRAWING NO. **E 715-SDLR-01**

ANTHONY L. UREMOVICH REGISTERED No. 18095 STATE OF INDIANA PROFESSIONAL ENGINEER

DESIGN STANDARDS ENGINEER

DETAILS PLACED IN THIS FORMAT	11-15-99
/s/ Anthony L. Uremovich DESIGN STANDARDS ENGINEER	11-15-99 DATE
/s/ Firooz Zandi CHIEF HIGHWAY ENGINEER	11-15-99 DATE
ORIGINALLY APPROVED	4-04-95

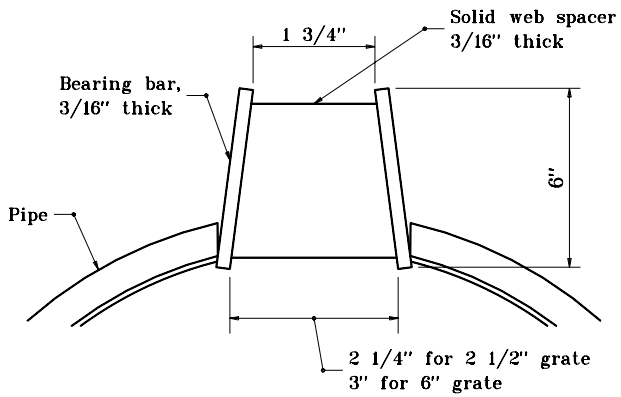

SECTION A–A
STANDARD GRATE DETAIL

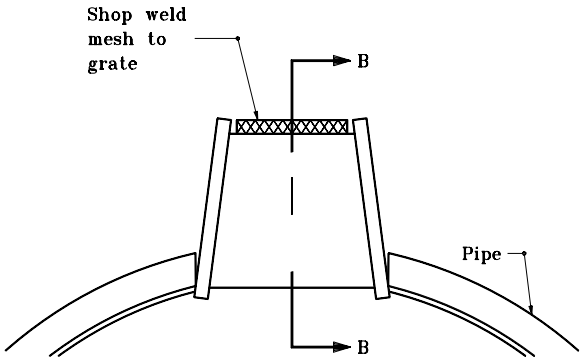

SECTION A–A
GRATE DETAIL WITH MESH

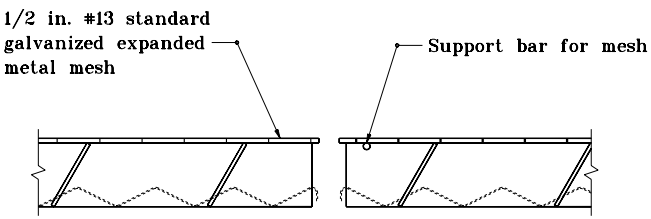

SECTION B–B

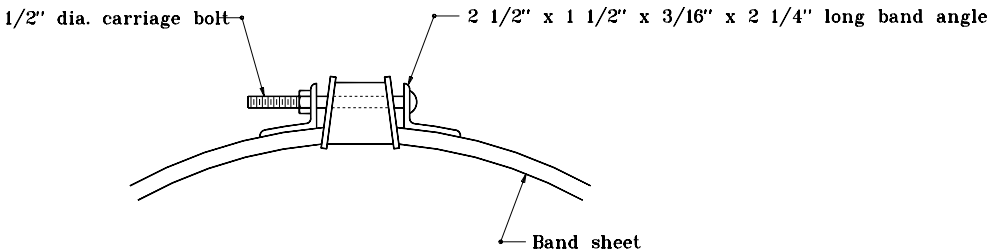

SECTION C–C

STANDARD SIZES						
PIPE THICK-NESS (IN.)	DIAMETER OF PIPE (IN.)					
	12	15	18	24	30	36
0.064	X	X	X	X	X	X
0.079	X	X	X	X	X	X
0.109	N.A.	N.A.	N.A.	N.A.	X	X

X – Size available for designated thickness

N.A. – Size not available for designated thickness

INDIANA DEPARTMENT OF TRANSPORTATION

SLOTTED DRAIN PIPE

JANUARY 1998

STANDARD DRAWING NO. **E 715–SLDR–02**

ANTHONY L. UREMOVICH REGISTERED No. 18095 STATE OF INDIANA PROFESSIONAL ENGINEER

DESIGN STANDARDS ENGINEER

DETAILS PLACED IN THIS FORMAT 11-15-99

/s/ Anthony L. Uremovich 11-15-99
DESIGN STANDARDS ENGINEER DATE

/s/ Firooz Zandi 11-15-99
CHIEF HIGHWAY ENGINEER DATE

ORIGINALLY APPROVED 1-02-98

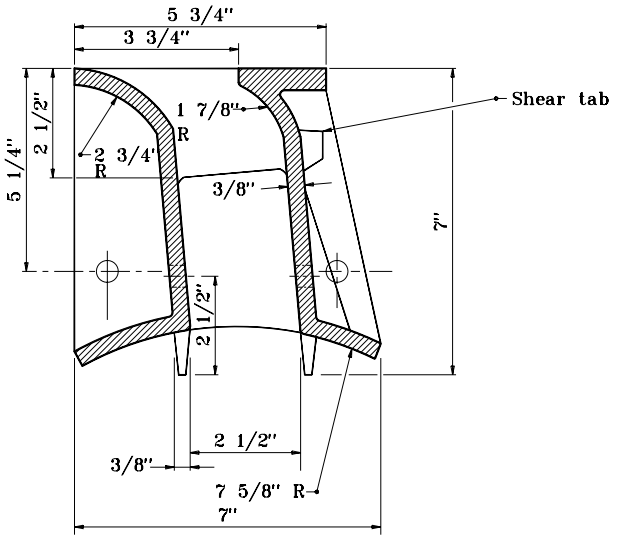

SECTION THROUGH VANE DRAIN

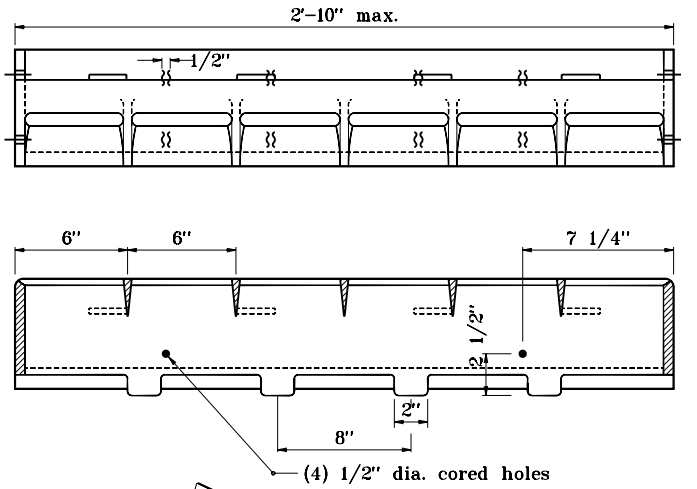

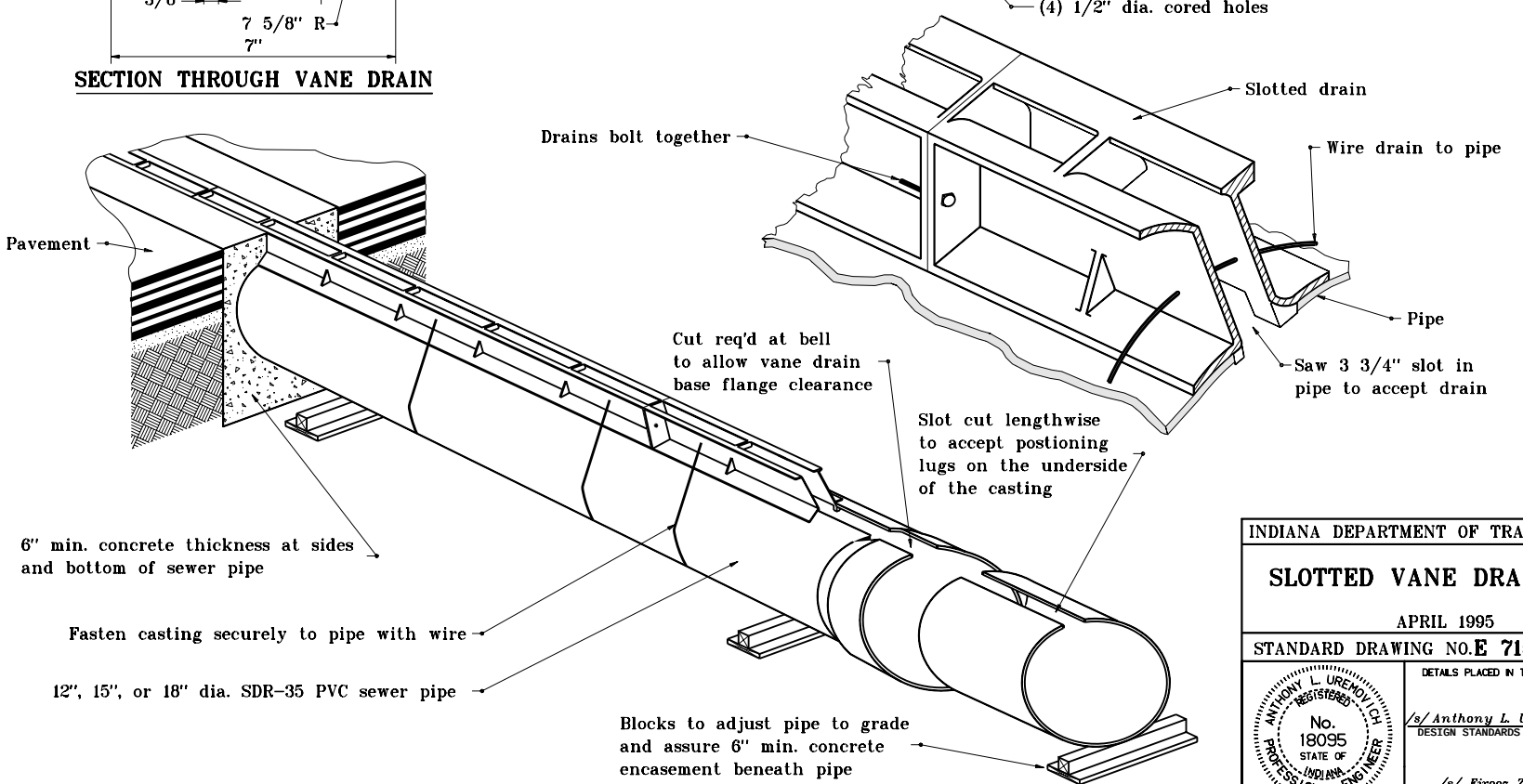

INDIANA DEPARTMENT OF TRANSPORTATION

SLOTTED VANE DRAIN PIPE

APRIL 1995

STANDARD DRAWING NO. E 715-SLDR-03

ANTHONY L. UREMOVICH REGISTERED No. 18095 STATE OF INDIANA PROFESSIONAL ENGINEER

DESIGN STANDARDS ENGINEER

DETAILS PLACED IN THIS FORMAT	11-15-99
/s/ Anthony L. Uremovich DESIGN STANDARDS ENGINEER	11-15-99 DATE
/s/ Firooz Zandi CHIEF HIGHWAY ENGINEER	11-15-99 DATE
ORIGINALLY APPROVED	4-03-95

GENERAL NOTES

① See Standard Drawing E 720-SDCP-02 for casting details.

② See Standard Drawing E 720-SDCP-03 for casting details.

③ ⅜" x 1½" stainless steel nonthreaded hex head bolt with locknut washer. (typ.)

④ Class A concrete, 6" min. thick. (typ.)

5. Cleanout ports shall be spaced at 250 ft or as shown on plans.

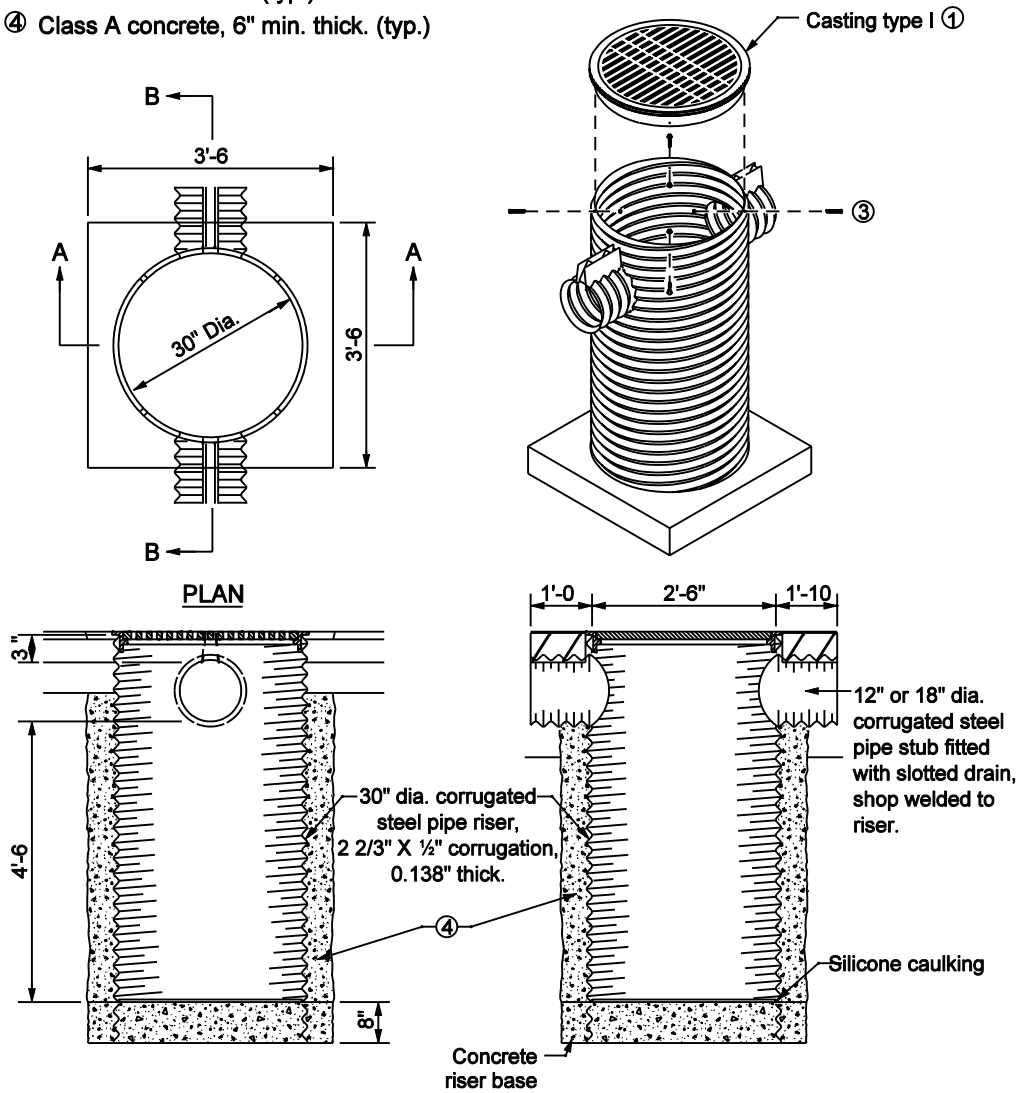

TYPE I
STEEL PIPE PORT

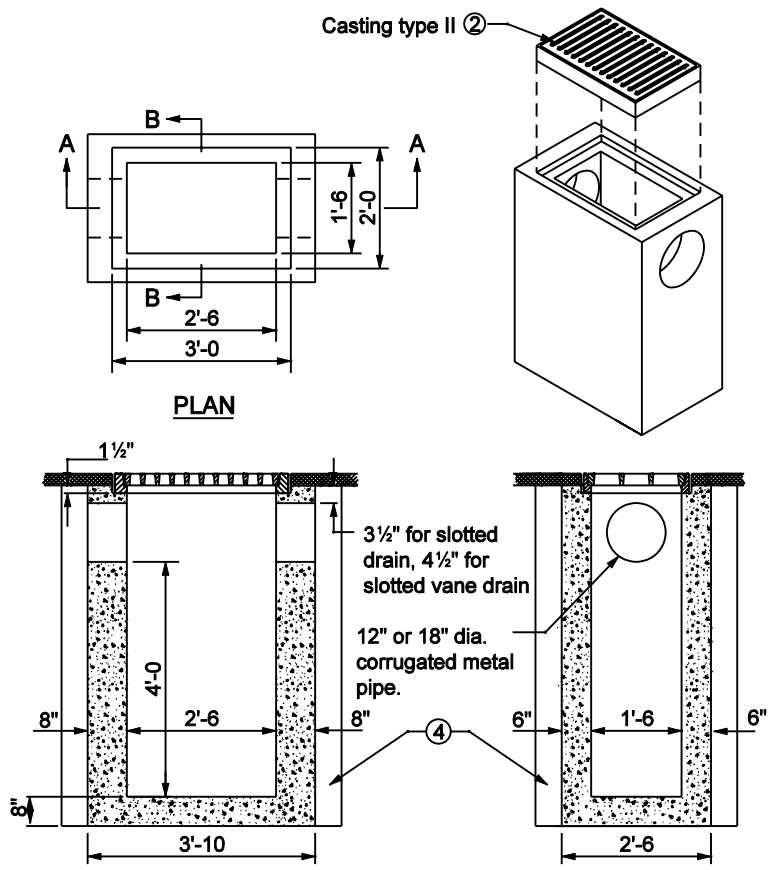

TYPE II
CONCRETE BOX PORT

INDIANA DEPARTMENT OF TRANSPORTATION

SLOTTED DRAIN PIPE
CLEANOUT PORT

MARCH 2003

STANDARD DRAWING NO. E 720-SDCP-01

RICHARD L. VanCLEAVE REGISTERED No. 9750 STATE OF INDIANA PROFESSIONAL ENGINEER

DESIGN STANDARDS ENGINEER

/s/ Richard L. VanCleave 3-03-03
DESIGN STANDARDS ENGINEER DATE

/s/ Richard K. Smutzer 3-03-03
CHIEF HIGHWAY ENGINEER DATE

GENERAL NOTES

1. Casting total weight 235 lbs.
2. Casting finish: no paint.

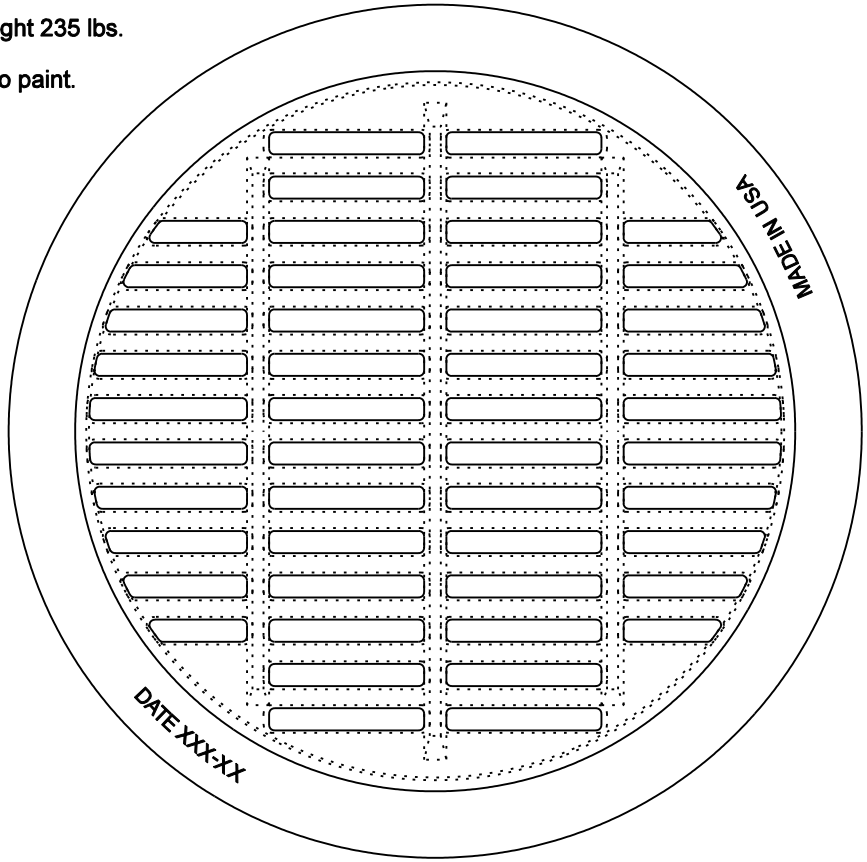

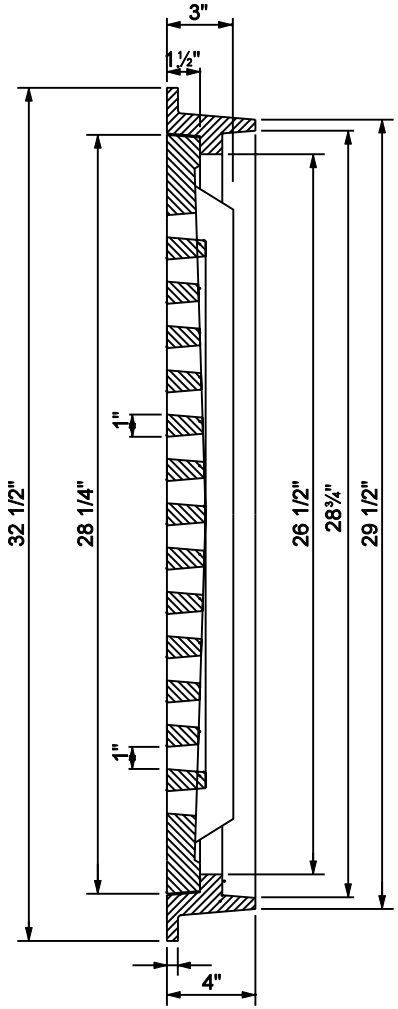

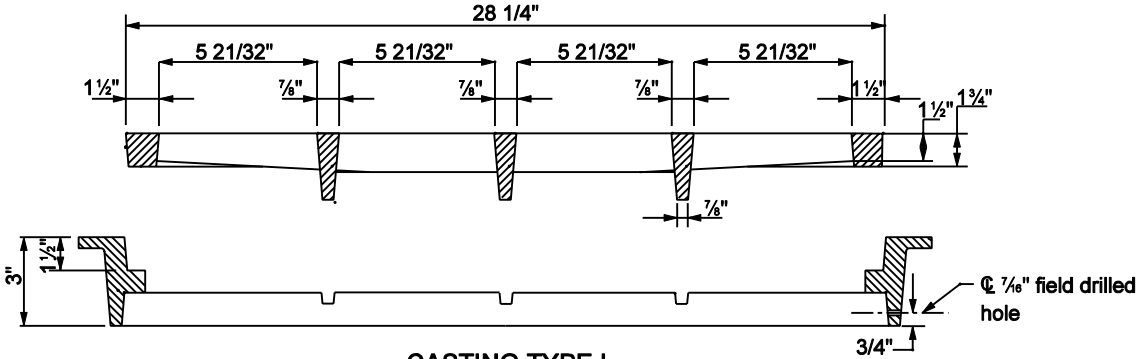

CASTING TYPE I

INDIANA DEPARTMENT OF TRANSPORTATION

CASTING TYPE I
FRAME AND GRATE

MARCH 2003

STANDARD DRAWING NO. E 720-SDCP-02

RICHARD L. VanCLEAVE REGISTERED No. 9750 STATE OF INDIANA PROFESSIONAL ENGINEER

DESIGN STANDARDS ENGINEER

/s/ Richard L. VanCleave 3-03-03
DESIGN STANDARDS ENGINEER DATE

/s/ Richard K. Smutzer 3-03-03
CHIEF HIGHWAY ENGINEER DATE

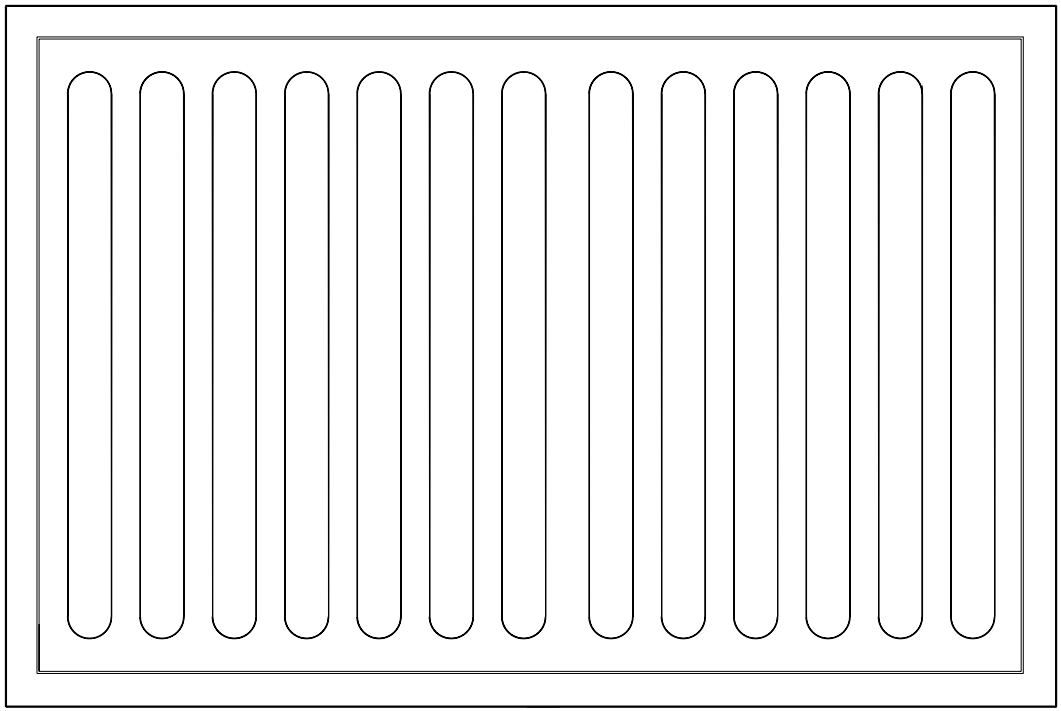

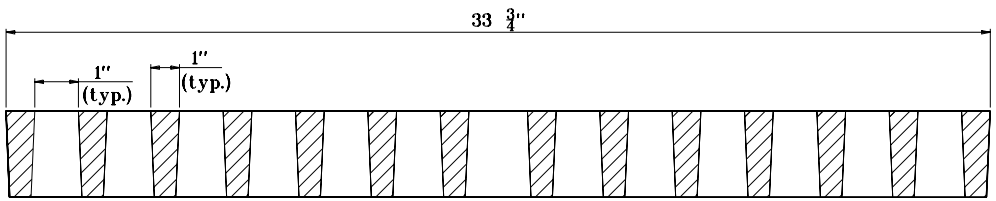

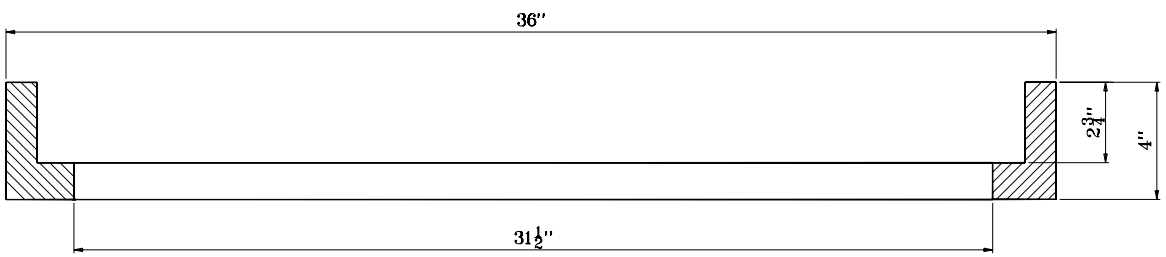

CASTING TYPE II

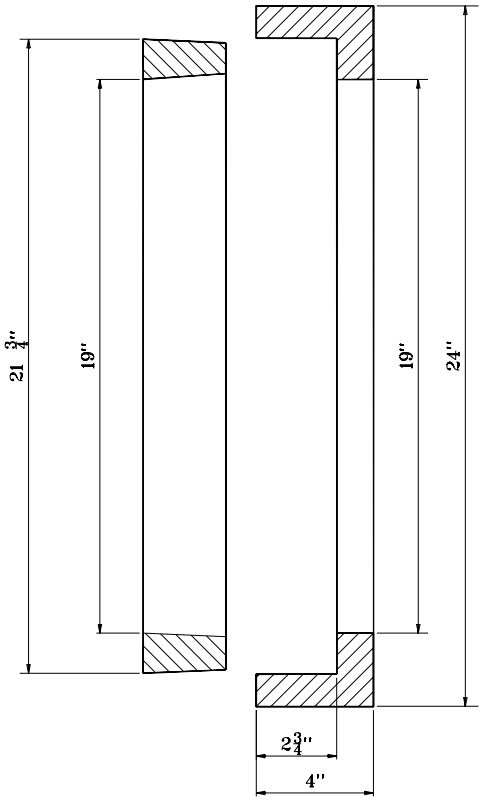

GENERAL NOTES

1. Casting total weight 440 lb.

2. Casting finish: no paint.

INDIANA DEPARTMENT OF TRANSPORTATION

CASTING TYPE II
FRAME AND GRATE

JANUARY 1999

STANDARD DRAWING NO. **E 720-SDCP-03**

ANTHONY L. UREMOVICH REGISTERED No. 18095 STATE OF INDIANA PROFESSIONAL ENGINEER

DESIGN STANDARDS ENGINEER

DETAILS PLACED IN THIS FORMAT	11-15-99
/s/ Anthony L. Uremovich DESIGN STANDARDS ENGINEER	11-15-99 DATE
/s/ Firooz Zandi CHIEF HIGHWAY ENGINEER	11-15-99 DATE
ORIGINALLY APPROVED	1-04-99