CITY OF BATESVILLE
DEVELOPMENT & CONSTRUCTION
STANDARDS MANUAL

CHAPTER 4
STREET SPECIFICATIONS

TABLE OF CONTENTS

Section	*Subject*	*Page*
4.1	GENERAL	4-1
4.1.1	General Requirements	4-1
4.1.2	References	4-1
4.1.3	Acceptance of Construction	4-1
4.1.4	Release of Maintenance Bond	4-2
4.1.5	Appeal from Administrative Action	4-3
4.1.6	Alternate Bonding Procedure	4-3
4.2	DESIGN CRITERIA	4-5
4.2.1	Streets	4-5
4.2.2	Curb & Gutter	4-7
4.2.3	Sidewalks and Curb Ramps	4-9
4.2.4	Drives	4-9
4.2.5	Storm Sewers for Streets	4-10
4.2.6	Underdrains	4-12
4.2.7	Signage	4-12
4.2.8	Pavement Markings	4-13
4.3	MATERIAL SPECIFICATIONS	4-13
4.3.1	Hot Mix Asphalt (HMA) Pavement	4-13
4.3.2	Portland Cement Concrete Pavement (PCCP)	4-13
4.3.3	Curb & Gutter, Sidewalk and Curb Ramps	4-13
4.3.4	Drives	4-14
4.3.5	Storm Sewers for Streets	4-14
4.3.6	Underdrains	4-14
4.3.7	Signage	4-14
4.3.8	Pavement Markings	4-15
4.4	CONSTRUCTION REQUIREMENTS	4-15
4.4.1	Hot Mix Asphalt (HMA) Pavement	4-15
4.4.2	Portland Cement Concrete Pavement	4-16
4.4.3	Curb & Gutter	4-17

4.4.4	Drives	4-18
4.4.5	Sidewalks and Curb Ramps	4-18
4.4.6	Storm Sewers for Streets	4-18
4.4.7	Underdrains	4-19
4.4.8	Pavement Markings	4-19
4.4.9	Inspection of Construction of Streets	4-19
4.4.10	Adoption of Streets	4-20
4.4.11	Work within Right-of-Way Not Approved By the Plan Commission	4-20

LIST OF DRAWINGS

Title	*Drawing No.*
Primary Arterial Street Section	ST-1
Secondary Arterial Street Section	ST-2
Feeder Street Section	ST-3
Residential Street Section	ST-4
Cul-de-sac Turnarounds Geometry	ST-5
Curb & Gutter	ST-6
Underdrain Section	ST-7
Typical Underdrain Laterals	ST-8
Temporary Cul-De-Sac	ST-9
Cold Joints – HMA Pavement	ST-10
INDOT Type D-1 Contraction Joint	E 503-CCPJ-01
INDOT Longitudinal Joint	E 503-CCPJ-02
INDOT Longitudinal Joint	E 503-CCPJ-03
INDOT Longitudinal Keyway Joint	E 503-CCPJ-04
INDOT Transverse Construction Joint	E 503-CCPJ-05
INDOT Transverse Joint Seals	E 503-CCPJ-06
INDOT Longitudinal Construction Joint	E 503-CCPJ-07
INDOT Longitudinal Construction Joint	E 503-CCPJ-08
INDOT Sidewalk Details	E 604-SDWK-01
INDOT Location Plan for Sidewalk Curb Ramps	E 604-SWCR-01
INDOT Sidewalk Curb Ramps General Notes & Details	E 604-SWCR-02
INDOT Sidewalk Curb Ramps Type A	E 604-SWCR-03
INDOT Sidewalk Curb Ramps Type B	E 604-SWCR-04
INDOT Sidewalk Curb Ramps Type C	E 604-SWCR-05
INDOT Sidewalk Curb Ramps Type D	E 604-SWCR-06
INDOT Sidewalk Curb Ramps Type E	E 604-SWCR-07
INDOT Sidewalk Curb Ramps Type F	E 604-SWCR-08
INDOT Sidewalk Curb's Ramps Type G and Type H	E 604-SWCR-09
INDOT Sidewalk Curb Ramps Type K	E 604-SWCR-10
INDOT Sidewalk Curb Ramps Type L	E 604-SWCR-11
INDOT Sidewalk Curb Ramp's Improved Access	E 604-SWCR-12

SECTION 4.1: GENERAL

4.1.1 GENERAL REQUIREMENTS

A. Minimum requirements for street construction shall be in accordance with "Standard Specifications" of the Indiana Department of Transportation (INDOT), current edition, hereinafter referred to as the "Standard Specifications", unless otherwise required by this Ordinance.

B. A copy of the current edition of these Standard Specifications is available on INDOT's website at:

www.in.gov/dot

C. Construction tolerances and testing shall be in accordance with the criteria and methods set out in Standard Plans.

4.1.2 REFERENCES

A. AASHTO M294 - Corrugated Polyethylene Pipe, 300 to 1200 mm Diameter

B. Indiana Design Manual - Published by the Indiana Department of Transportation

SECTION 4.2: DESIGN CRITERIA

4.2.1 STREETS

A. The street and alley layout shall provide access to all lots and parcels of land within the subdivision. Proposed street shall be aligned with existing streets at intersections. Cul-de-sacs shall not exceed 500 feet in length unless approved by the Plan Commission.

B. Proposed streets shall be adjusted to the contour of the land so as to produce usable lots and streets of reasonable gradient. A maximum grade of 10% shall not be exceeded.

C. All arterials and feeder streets shall be properly related to special traffic generators such as industries, business districts, schools, churches, and shopping centers, to population densities; and to the pattern of existing and proposed land uses. The Plan Commission reserves the right to designate proposed streets as feeder or arterial streets.

D. Where deemed appropriate by the Plan Commission, streets shall be extended to the boundary of the tract to be subdivided so as to provide for normal circulation of traffic within the vicinity.

E. Wherever there exists a dedicated or platted portion of a street or alley adjacent to the proposed subdivision, the remainder of the street or alley to the prescribed width shall be platted within the proposed subdivision.

F. Proposed streets and intersections shall conform to the geometric design standards shown in Table 4.2.1-1. Primary arterial streets shall conform to cross section criteria shown in Drawing ST-1. Secondary arterial streets shall conform to cross section criteria shown in Drawing ST-2. Feeder streets shall conform to cross section criteria shown in Drawing ST-3. Residential streets shall conform to cross section criteria shown in Drawing ST-4.

G. Geometric design standards for cul-de-sacs shall be as shown in Drawing ST-5. Mailboxes for houses or businesses located on cul-de-sacs shall be located at a central position per Drawing ST-5.

H. Alleys shall not be permitted in residential areas but shall be included in commercial and industrial areas where needed for loading and unloading or access purposes.

Design Criteria	Primary Arterials	Secondary Arterials	Feeder Streets	Residential Streets	Alley
Right of Way Width	80 Ft.	80 Ft.	60 Ft.	50 Ft.	24 Ft.
Maximum Grade	6.5%	8%	10%	11%	11%
Minimum Grade	0.5%	0.5%	0.5%	0.5%	0.5%
Min. Angle of Intersection	90°	80°	80°	70°	70°
Min. Corner Radius	30 Ft.	30 Ft.	25 Ft.	20 Ft.	20 Ft.
Min. Horizontal Curve Radius	1000 Ft.	600 Ft.	250 Ft.	150 Ft.	100 Ft.
Min. Stopping Sight Distance(1)	350 Ft.	350 Ft.	300 Ft.	250 Ft.	250Ft.
Min. Crest Curve Length(2)	55 x A	55 x A	35 x A	25 x A	25 x A
Min. Sag Curve Length(2)	75 x A	75 x A	60 x A	40 x A	40 x A
Min. Tangent Length between Reverse Curves	260 Ft.	260 Ft.	240 Ft.	210 Ft.	210 Ft.

(1) Stopping sight distance shall be calculated in accordance with Chapter 42 of the Indiana Design Manual.

(2) Vertical curve length shall be defined by the greater of multiplying 0.6 by the posted speed limit or of multiplying the algebraic difference (A) in grade by the value in the table.

Table 4. 2.1-1 Geometric Design Standards for Streets

I. Intersections of more than two streets at one point shall not be allowed. Two-legged intersections shall not be allowed.

J. Whenever the proposed subdivision contains or is adjacent to a railroad right-of-way or a highway designated as a limited access highway by the appropriate highway authorities, provision shall be made for a marginal access street or a parallel street at a distance acceptable for the appropriate use of the land between the highway or railroad and such street.

K. Proposed streets that are extensions of or in alignment with existing streets shall bear the same name as that borne by the existing street.

L. Only one street, driveway, or point of vehicle access shall be permitted from a subdivision onto an arterial street, unless deemed unreasonably harmful to the health, safety, and general welfare of the public. Subdivisions adjacent to feeder or residential streets shall provide two separate streets to access the subdivision.

M. Proposed streets shall be constructed of Hot Mix Asphalt (HMA) pavement or Portland Cement Concrete Pavement (PCCP) per these specifications. For HMA pavement, the minimum proposed pavement section shall be as shown in Table 4.2.1-2. Minimum thickness for Portland cement concrete pavement (PCCP) on primary and secondary arterial streets shall be 10 inches with 6 inches of compacted aggregate, No. 53 for base. Minimum thickness for PCCP on feeder and residential streets shall be 6 inches with 6 inches of compacted aggregate, No. 53 for base. The concrete mix design shall be in accordance with Section 502.04 of the current Indiana Department of Transportation (INDOT) specifications.

N. When the entire street is not constructed and creates a "dead-end" for more than thirty (30) days as part of a phased development, a temporary cul-de-sac per Drawing ST-9 shall be installed.

O. Trees planted within the street right-of-way shall be approved by the Street Commissioner.

4.2.2 CURB & GUTTER

A. For primary and secondary arterial streets, proposed curb and gutter shall be combined concrete curb and gutter in accordance with Drawing ST-6. For feeder and residential streets, proposed curb and gutter shall be combined concrete curb and gutter or mountable curb and gutter in accordance with Drawing ST-6.

HMA Pavement

Street Classification	Proposed Pavement Section
Primary Arterial	1.5 in. HMA, TYPE B, SURFACE on, 2.5 in. HMA, TYPE B, INTERMEDIATE on, 7.0 in. HMA, TYPE B, BASE on, 6.0 in. COMPACTED AGGREGATE, No. 53, BASE
Secondary Arterial	1.5 in. HMA, TYPE B, SURFACE on, 2.5 in. HMA, TYPE B, INTERMEDIATE on, 7.0 in. HMA, TYPE B, BASE on, 6.0 in. COMPACTED AGGREGATE, No. 53, BASE
Feeder or Residential	1.0 in. HMA, TYPE A, SURFACE on, 2.0 in. HMA, TYPE A, INTERMEDIATE on, 4.0 in. HMA, TYPE A, BASE on, 6 in. COMPACTED AGGREGATE, No. 53, BASE

PCCP Pavement

Street Classification	Proposed Pavement Section
Primary Arterial	9.0 in. PCCP on, 6.0 in. COMPACTED AGGREGATE, No. 53, BASE
Secondary Arterial	9.0 in. PCCP on, 6.0 in. COMPACTED AGGREGATE, No. 53, BASE
Feeder	7.0 in. PCCP on, 6.0 in. COMPACTED AGGREGATE, No. 53, BASE
Residential	6.0 in. PCCP

Table 4.2.1-2 Proposed Pavement Sections

4.2.3 SIDEWALKS AND CURB RAMPS

A. Sidewalks shall be provided in all residential subdivisions with a planned density of two (2) or more dwellings per acre. Sidewalks shall be constructed along all feeder and arterial streets, and along residential streets at the discretion of the Plan Commission.

B. Sidewalks and curb ramps shall be designed in accordance with the Americans with Disabilities Act Accessibility Guidelines (ADAAG) and the U.S. Architectural and Transportation Barriers Compliance Board's "Accessible Public Rights-of-Way Design Guide." The design guide is available at the following website: www.access-board.gov

C. The location of curb ramps shall take precedence over the location of drainage structures and signal, utility, or light poles. Drainage structures shall not be located within the limits of the curb ramp, exclusive of flared sides. Poles shall be located so as to not impede the usage and safety of the curb ramps. Crosswalk markings shall be located such that the curb ramps shall be contained within the markings unless otherwise specified. The flared sides need not fall within the crosswalk lines. The normal gutter flow line shall be maintained throughout the curb ramp area, and appropriate drainage structures shall be used, as needed, to intercept the flow prior to the curb ramp area. Positive drainage shall also be provided to carry water away from the intersection of the curb ramp and the gutter line.

D. Indiana Department of Transportation (INDOT) standard drawings addressing curb ramps are included at the end of this chapter. Sidewalks and curb ramps should be designed and constructed per these drawings, except that detectable warning elements shall not be required.

4.2.4 DRIVES

A. Concrete drives shall be provided from the back of the curb to the right-of-way limits for all access points for public streets. On residential streets or adjacent to parking lanes, the minimum radius shall be ten (10) feet. For all other streets, the minimum radius shall be twenty (20) feet. The maximum grade for drives shall be 12:1. A four (4) foot section of the drive aligned with the sidewalk shall be at a maximum slope of 2%.

B. Residential drives shall be defined as driveways providing access to a single family residence, duplex, or apartment building with not more than four dwelling units. Residential drives shall be constructed with six (6) inches of concrete pavement. Residential drives shall be limited to a width of 24 feet.

C. Commercial drives shall be defined as driveways providing access to an office, retail or institutional building, or to an apartment building with five or more dwelling units. Industrial plant driveways, whose primary function is to

serve administrative or employee parking lots, shall be considered commercial drives. Commercial drives shall be constructed with six (6) inches of concrete pavement and six (6) inches of aggregate subgrade. Commercial drives shall be limited to a width of forty (40) feet.

D. Industrial drives shall be defined as driveways providing access to and from loading docks of an industrial facility, warehouse, or truck terminal. A centralized retail development, such as a shopping center, which may have one or more driveways designed, signed and located to provide access for trucks, shall also be considered and industrial drive. Industrial drives shall be constructed with ten (10) inches of concrete pavement and six (6) inches of aggregate subgrade. Industrial drives shall be limited to a width of sixty (60) feet.

4.2.5 STORM SEWERS FOR STREETS

A. Policy

1. Within street rights-of-way all surface water shall be drained by a drainage system. All pipes, culverts, intersectional drains, drop inlets, bridges, pipe and sections and similar or related installations necessary to provide adequate surface water drainage of the area, shall be constructed and installed in accordance with the approved plans and specifications submitted therefor by the developer to the various governmental agencies having jurisdiction over drainage.
2. Storm drainage and surface water installations, including roof downspouts and sump pumps, shall not be connected to or empty into sanitary sewer systems. Roof downspouts may discharge into drainage ditches, storm sewer pipes, curb & gutter or they may discharge directly onto lawn or landscaped areas at least ten (10) feet from public right-of-way. Sump pumps may discharge into drainage ditches, storm sewer pipes, underdrains or they may discharge directly onto lawn or landscaped areas at least ten (10) feet from public right-of-way.
3. The type and location of all pipe, culverts, bridges, and all other stormwater facilities intended to carry stormwater within street rights-of-way shall be approved by the Street Commissioner. Evidence shall be presented at the time of presenting the street plans for approval that application has been made to the appropriate other governmental agencies having jurisdiction over drainage for approval of the size and other hydraulic criteria.
4. The Street Commissioner shall review and approve any drainage structure whose failure could seriously affect the street itself. The Plan Commission shall also review and approve the overall drainage plan.

B. Definitions

1. Bridge: Any structure for which the span is twenty (20) feet or greater.
2. Hydraulic Grade Line (HGL): The hydraulic grade line is the locus of elevations to which the water would rise in successive piezometer tubes if the tubes were installed along the pipe run (pressure head plus elevation head).
3. Q_{10}: flow form a 10-year storm event
4. Q_{50} - flow form a 50-year storm event
5. Sag Point: A low point in a vertical curve.
6. Spread: The width of stormwater flow in the gutter measured laterally from the roadway curb.

C. Hydrology and Design

1. Design Storm: Enclosed storm sewer systems shall be designed so that Q_{10} passes through each structure via gravity without surcharging.
2. Check Storm: The storm drain system must accommodate the Q_{50} storm event. The system may operate under pressure, but the hydraulic grade line (HGL) must remain below the rim elevation at all system manholes, inlets, catch basins and similar structures.
3. Pipe Sizes/Cover/Velocity: The minimum pipe diameter for storm drain structures within five feet of pavement shall be 12 inches. The cover provided over the pipe shall be a minimum of 12 inches. Cover shall be measured from the top of the pipe to the bottom of the pavement or other improved surface. or to the surface in unimproved areas. The maximum cover shall be that recommended by the pipe manufacturer. The minimum full-flow velocity for storm drain structures shall is 2.6 ft/s. The maximum velocity is 6.5 ft/s
4. Inlet Spacing: Inlets shall be spaced so that the allowable spread of water into the through-lane pavement is not exceeded. For multilane arterials, the allowable spread shall be one-half of the outside travel lane. For two lane streets, the allowable spread shall be four (4) feet into the travel lane. However, at no point shall the water depth at the curb face exceed 3.5 inches. Gutter flow that bypasses curb inlets installed on grade must be accounted for at downstream structures. At sag inlets, the inlet efficiency shall be analyzed to ensure that stormwater will not pond above the allowable spread. Flanking inlets or slotted drain pipes shall be installed as necessary to augment the receipt of sag point flow. It is recommended that inlet spacing calculations be performed in accordance with Chapter 36, Section 10 of the Indiana Design Manual.
5. Manholes: Manholes shall be placed at maximum spacing of 400 feet, and as follows:
   a. where two or more storm drains converge,
   b. where the pipe size changes,
   c. where an abrupt change in alignment occurs, and
   d. where an abrupt change of grade occurs.

   Manholes should not be located in traffic lanes; however, when it is impossible to avoid locating a manhole in a traffic lane, care should be

taken to ensure its casting will not be in the normal vehicle path. Manholes shall be sized per the requirements of Chapter 36, Section 11 of the Indiana Design Manual.

6. Culverts: Culverts crossing transversely under streets or otherwise conveying streams, creeks, or drainage ditches shall be designed in accordance with Chapter 31 of the Indiana Design Manual.
7. Bridges: Bridges shall be designed in accordance with Chapters 32 and 33 of the Indiana Design Manual.

D. Submission Requirements
1. Documentation presented to the Plan Commission shall include:
   a. Hydrologic and hydraulic data, preliminary calculations and analyses, and all related information used in developing conclusions and recommendations related to drainage requirements.
   b. All design assumptions and selected criteria including the decisions related thereto.
   c. Provide all related references to include such things as published data and reports, memos, and letters.
   d. Documentation shall be organized to be as concise and complete as practical so that knowledgeable designers can understand.
   e. Shall be bound or placed in a binder with a cover or cover letter signed by a professional engineer or land surveyor registered in the State of Indiana.
   f. When computer modeling programs are utilized, the methodology of the program shall be documented so the reviewer can understand the output.

4.2.6 UNDERDRAINS

A. Underdrains shall be required under the curb and gutter for all proposed streets. Underdrains shall outlet into proposed storm sewer inlets or manholes. For the purposes of cleanout and maintenance, underdrains shall be connected to both the upstream and downstream storm sewer structures, when such structures are available. Underdrains shall be constructed in accordance with Drawing ST-7.

B. In general, underdrain slopes should follow the slope of the proposed pavement. However, the minimum slope for underdrain pipe shall be 0.2%.

C. Wye connections shall be placed at lot lines per Drawing ST-8 for future use as a connection point for sump pumps.

D. Connections to storm sewer structures shall be connected with rodent screens.

4.2.7 SIGNAGE

A. Regulatory and warning signs shall be designed and placed according to the Manual on Uniform Traffic Control Devices, current edition.

B. At least two street name signs shall be installed on one post at each street intersection to be located on the northeast corner thereof, whenever possible, and on the parkstrip between the street and sidewalk at point approximately six (6) inches from the sidewalk. The street signs shall be designed in accordance with the Manual on Uniform Traffic Control Devices, current edition, except the letters shall be 6 inches tall.

4.2.8 PAVEMENT MARKINGS

A. Pavement markings shall be designed per the requirements of the current Manual on Uniform Traffic Control Devices.

SECTION 4.3: MATERIAL SPECIFICATIONS

4.3.1 HOT MIX ASPHALT (HMA) PAVEMENT

A. HMA pavement shall be in accordance with Section 402 of the current Indiana Department of Transportation (INDOT) specifications. The HMA pavement shall be supplied by an INDOT-certified hot mix asphalt producer.

B. Tack coat shall be in accordance with Section 406 of the current Indiana Department of Transportation (INDOT) specifications.

C. Compacted aggregate, No. 53 for base shall be in accordance with Section 301 of the current Indiana Department of Transportation (INDOT) specifications. The aggregate shall come from an INDOT-certified aggregate producer.

4.3.2 PORTLAND CEMENT CONCRETE PAVEMENT (PCCP)

A. PCCP materials shall be in accordance with Section 502.02 of the current Indiana Department of Transportation (INDOT) specifications.

B. Joint materials shall be in accordance with Section 503.02 of the current Indiana Department of Transportation (INDOT) specifications.

C. Curing materials shall be in accordance with Section 912.01 of the current Indiana Department of Transportation (INDOT) specifications.

4.3.3 CURB & GUTTER, SIDEWALK AND CURB RAMPS

A. Concrete shall be in accordance with Class A concrete per Section 702 of the

current Indiana Department of Transportation (INDOT) specifications.

B. Joint materials shall be in accordance with Section 906 of the current Indiana Department of Transportation (INDOT) specifications.

C. Curing materials shall be in accordance with Section 912.01 of the current Indiana Department of Transportation (INDOT) specifications.

4.3.4 DRIVES

A. Concrete shall be in accordance with Class A concrete per Section 702 of the current Indiana Department of Transportation (INDOT) specifications.

B. Aggregate subgrade shall be compacted aggregate, No. 53 for base in accordance with Section 301 of the current Indiana Department of Transportation (INDOT) specifications. The aggregate shall come from an INDOT-certified aggregate producer.

C. Joint materials shall be in accordance with Section 906 of the current Indiana Department of Transportation (INDOT) specifications.

D. Curing materials shall be in accordance with Section 912.01 of the current Indiana Department of Transportation (INDOT) specifications.

4.3.5 STORM SEWERS FOR STREETS

A. Storm sewers for streets shall be constructed per the materials and structures specified in Chapter 3 of this manual.

4.3.6 UNDERDRAINS

A. Underdrain pipe and fittings shall be perforated, corrugated, polyethylene pipe per AASHTO M294. Wye connections and pipes extending out at lot lines shall not be perforated.

B. Geotextile for underdrains shall be in accordance with Section 913.19 of the current Indiana Department of Transportation (INDOT) specifications.

C. Aggregate for underdrain shall be coarse aggregate, Class E or higher, size No. 8 or 9, in accordance with Section 904 of the current Indiana Department of Transportation (INDOT) specifications.

D. Rodent screens shall be woven stainless steel wire mesh or galvanized hardware cloth.

4.3.7 SIGNAGE

A. Sign posts shall be steel, flanged, channel posts in accordance with Section 910.14 of the current Indiana Department of Transportation (INDOT) specifications.

B. Signs shall be in accordance with Section 913.10 of the current Indiana Department of Transportation (INDOT) specifications.

4.3.8 PAVEMENT MARKINGS

A. Pavement marking materials shall be in accordance with Section 808.02 of the current Indiana Department of Transportation (INDOT) specifications.

SECTION 4.4: CONSTRUCTION REQUIREMENTS

4.4.1 HOT MIX ASPHALT (HMA) PAVEMENT

A. HMA courses equal to or less than 1 inch thick shall not be placed when the ambient and surface temperatures are less than 60° F. HMA courses greater than 1 inch thick shall not be placed when the ambient and surface temperatures are less than 45° F. HMA courses shall not be placed on frozen subgrade.

B. HMA pavement and tack coat shall be placed per the Section 402 and Section 406, respectively, of the current Indiana Department of Transportation (INDOT) specifications.

C. Contact surfaces of curbing, gutters, manholes and other structures shall be painted with a thin, uniform coating of tack coat prior to the bituminous mixture being placed against them.

D. Mixtures for base shall conform to the lines, grades and cross sections shown on the plans or as otherwise specified.

E. Spreading and finishing shall be per Section 402.13 of the current Indiana Department of Transportation (INDOT) specifications. Each inch of HMA pavement shall have a density of 110 lbs/syd.

F. Compaction shall be per Section 402.15 of the current Indiana Department of Transportation (INDOT) specifications.

G. Pavement smoothness for roadways, driveways, and other lanes or paths with clearly defined, longitudinal boundaries shall be per Section 401.18 of the current Indiana Department of Transportation (INDOT) specifications, except that the profilograph requirements shall not apply.

H. Areas outside the allowable tolerance shall be corrected at the Developer's expense. The Street Commissioner shall approve the method of the correction. Milling of the surface to correct variations shall not be permitted. If corrective methods are ineffective, the Contractor shall remove and replace the pavement to proper tolerances at no cost to the City.

I. HMA surface shall not be placed until 75% of the lots in the development have been constructed and received an occupancy permit.

4.4.2 PORTLAND CEMENT CONCRETE PAVEMENT

A. Concrete pavement shall be placed with the methods described in Sections 502.07 through 502.10, and 502.12, and 502.16 of the current Indiana Department of Transportation (INDOT) specifications. Finishing and curing shall be in accordance with Section 504 of the current Indiana Department of Transportation (INDOT) specifications.

B. Joints shall be placed in the PCCP as follows:
   1. Type D-1 Contraction Joint.
      Type D-1 contraction joints shall be placed by sawing slots in the pavement unless alternative methods are approved. Spacing between Type D-1 contraction joints shall not exceed 20 feet. The sawed slot shall be cleaned of all foreign matter from the entire depth of the cut. Type D-1 contraction joints shall be as shown in Figure 2.3-1.
   2. Longitudinal Joint.
      Longitudinal joints shall be created by sawing slots in the pavement unless alternative methods are approved. Longitudinal joint spacing shall not exceed 16 feet. Tie bars shall be placed by mechanical equipment in accordance with 508.04(a) of the current Indiana Department of Transportation (INDOT) specifications, or rigidly secured in place by chairs, or other approved methods. The longitudinal joints shall be sawed concurrently with the initial D-1 contraction joint slots. Longitudinal joints may be replaced longitudinal construction joints when approved by the Street Commissioner.
   3. Transverse Construction Joint.
      Transverse construction joints shall be constructed when there is an interruption of more than 30 minutes in the PCCP placement operations. Transverse construction joints located at D-1 contraction joints shall be constructed in accordance with (1) above. All other transverse construction joints shall be at least 6 feet from an adjacent D-1 contraction joint. Tie bars for transverse contraction joints may be placed in the plastic or hardened concrete. A header board with openings for tie bars shall be used when placing tie bars in plastic concrete. The header board shall be rigid and accurately set to grade. Retrofitted tie bars shall be secured at right angles to the pavement with a chemical anchoring

system.

4. Longitudinal Construction Joint.
   Longitudinal construction joints shall be placed at the dividing lines between lanes. Tie bars shall be placed by mechanical equipment in accordance with 508.04(a) of the current Indiana Department of Transportation (INDOT) specifications, or other approved methods. Longitudinal construction joints saw cuts may be made as soon as the PCCP has sufficiently hardened. Construction traffic shall not be allowed on the PCCP until the joints are sealed. Bent tie bar spacing shall be adjusted to prevent interference with the D-1 contraction joints. Bent tie bars shall not be omitted.
5. Expansion Joint.
   Expansion joints shall be placed as full-width, full-depth transverse joints at intervals not exceeding 500 feet. The joint filler shall be shaped to the subgrade, parallel to the surface, and be the full width of the pavement. Damaged or repaired joint filler shall not be used. The joint filler shall be held in a position which is normal to the surface. Finished joints shall not deviate more than 1/4 inch from a straight line. There shall be no offsets between adjacent sections when the joint filler consists of more than one section. No plugs of concrete will be permitted within the expansion space.
6. Sawing equipment shall be self-propelled single or gang-mounted units. The saw shall be capable of maintaining the specified alignment and depth of cut without damaging the PCCP.
7. Indiana Department of Transportation (INDOT) standard drawings addressing PCCP joints are included at the end of this chapter and are considered part of the construction requirements.

C. Joints shall be sealed per Section 503.05 of the current Indiana Department of Transportation (INDOT) specifications.

D. Dowel bar assemblies shall be in accordance with Section 503.04 of the current Indiana Department of Transportation (INDOT) specifications.

E. PCCP shall not be placed on frozen subgrade or subbase. PCCP operations shall not begin until the ambient temperature is 35° F and rising. PCCP operations shall be discontinued when the ambient temperature is descending and is 40° F. Regardless of placement temperature, sufficient means shall be taken to prevent the PCCP from freezing prior to opening to non-construction traffic. Any PCCP damaged by freezing shall be removed and replaced.

4.4.3 CURB & GUTTER

A. Construction requirements shall comply with subsection 605.04 of the Standard Specifications.

4.4.4 DRIVES

A. Construction requirements shall comply with those for Portland cement concrete pavement.

4.4.5 SIDEWALKS AND CURB RAMPS

A. The bottom edge of the curb ramps shall be flush with the gutter line.

B. The curb ramp running slope shall not exceed 12:1. Curb ramp cross slope shall not exceed 50:1.

C. Excavation shall be made to the required depth and to a width that will permit the installation and bracing of forms. The foundation shall be shaped and compacted to a firm, even surface in accordance with proposed grade. All soft and yielding material shall be removed and replaced with acceptable material.

D. Forms shall be of wood, metal, or other approved material and shall extend to the full depth of the concrete. Forms shall be straight, free from warp, and of sufficient strength to resist the pressure of the concrete without springing. Bracing and staking of forms shall be such that the forms remain in both horizontal and vertical alignment until their removal.

E. The surface shall be finished with a wooden float. No plastering of the surface will be permitted. Sidewalks shall receive a broom finish. Ramps shall be coarse broomed and corrugated transverse to the slope as shown in the details at the end of this Chapter. The surface texture of the flared sides shall be coarse broomed with the striations transverse to the slopes.

F. All exposed edges shall be finished with a 1/4 inch radius. "Picture-framing" shall not be allowed.

G. Preformed 1/2 inch joint filler shall be placed around all appurtenances, such as manholes and utility poles which extend into and through the sidewalk, and between the sidewalk and any fixed structure. The preformed joint filler shall extend for the full depth of the concrete, and shall be flush with the surface of the adjacent concrete. Joints shall be sealed with a sealant in accordance with Section 906.02 of the current INDOT specifications.

H. Concrete shall be cured for at least 72 hours. Curing shall be in accordance with Section 504.04 of the current Indiana Department of Transportation (INDOT) specifications. During the curing period, all pedestrian traffic shall be excluded.

4.4.6 STORM SEWERS FOR STREETS

A. Storm sewers for streets shall be constructed per the requirements of Chapter 3 of this manual.

4.4.7 UNDERDRAINS

A. Trenches shall be excavated to the dimensions and grade shown on the plans. Pipes shall be secured to ensure that the required grade and horizontal alignment of the pie are maintained. The pipe sections shall be joined securely with the appropriate couplings, fittings or bands. Aggregate for underdrains shall be placed in a manner which minimizes aggregate contamination.

B. Storage and handling of geotextiles shall be in accordance with the manufacturer's recommendations. Damaged or defective geotextile shall be replaced as directed by the Street Commissioner. The geotextile shall be placed loosely, but with no wrinkles or folds. The ends of subsequent rolls shall overlap by at least 1.0 ft. The upstream geotextile shall overlap the downstream geotextile. Placement of aggregate shall commence following placement of geotextile. When pavement or subbase is not placed over the underdrain within 24 hours, the geotextile overlap shall be secured to minimize aggregate contamination.

4.4.8 PAVEMENT MARKINGS

A. Pavement markings shall be placed in accordance with Section 808 of the current Indiana Department of Transportation (INDOT) specifications.

4.4.9 INSPECTION OF CONSTRUCTION OF STREETS

A. For any construction project involving the adoption of a street by the City of Batesville, the Street Commissioner shall be contacted 72 hours prior to the commencement of any work.

B. For installation of storm sewer, the Street Commissioner shall be contacted 72 hours prior to the commencement of the work, for each phase or mobilization. At the request of the Street Commissioner, 24 hours' notice shall be required prior to the installation of any manhole, inlet, or catch basin.

C. For installation of underdrain, the Street Commissioner shall be contacted 72 hours prior to the commencement of the work, for each phase or mobilization.

D. For installation of curb and gutter, the Street Commissioner shall be contacted 72 hours prior to the commencement of the work, for each phase or mobilization.

E. The Street Commissioner or his designated representative shall witness proofrolling of the subbase prior to the placement of the stone base, and of the base prior to placement of HMA or PCCP pavement. Proofrolling shall be performed with a tri-axle dump truck loaded to 20 tons, or concrete truck loaded with at least 7 yards of concrete. The number of passes will be at the discretion of the Street Commissioner or his representative. Compaction failure shall be defined as the occurrence of rutting deeper than 2 inches, or cracking or pumping of the compacted base or subbase. Any roller marks, irregularities, or failures shall be corrected. The method of correction shall be at the discretion of the developer. Subsequent proofrolling of the failed base or subbase, witnessed by the Street Commissioner or his representative, shall occur until it is deemed as passing.

F. For installation of HMA Base, Intermediate (Binder) or Surface, the Street Commissioner shall be contacted 24 hours prior to the commencement of the work, for each phase or mobilization.

G. Material certifications shall be supplied at the request of the Street Commissioner. When requested, the manufacturer shall prepare a certification. It shall certify that the materials furnished are in accordance with the specifications. The applicable specification shall be referred to in the certification. It shall also refer to the project site or the contractor to which the materials were furnished.

H. A checklist for inspection notification requirements is provided at the end of the chapter.

4.4.10 ADOPTION OF STREETS

A. A street shall not be adopted by the City of Batesville until the following requirements are met:
   1. The Batesville Advisory Plan Commission has approved said adoption and permitted the construction.
   2. At least 80% of the lots in the development have been constructed and received an occupancy permit.
   3. All bonding requirements have been met.
   4. All responsible parties have signed the Subdivision Acceptance Form shown in **Appendix C.**
   5. The construction has been performed according to these specifications and the Street Commissioner, or his designated representative, has signed each applicable section of the Street Construction Inspection Form shown in **Appendix D.**

END OF SECTION

CITY OF BATESVILLE
STREET CONSTRUCTION CHECKLIST

STREET COMMISSIONER: (812) 934-4393

CONTACT STREET COMMISSIONER 72 HOURS PRIOR TO:

____ INITIAL START OF CONSTRUCTION

____ CONSTRUCTION OF STORM SEWER FACILITIES

____ CONSTRUCTION OF UNDERDRAIN

____ CONSTRUCTION OF CURB & GUTTER

CONTACT STREET COMMISSIONER 24 HOURS PRIOR TO:

____ INSTALLATION OF STORM SEWER MANHOLES, CATCH BASINS OR INLETS (if required by Street Commissioner)

____ PROOFROLLING AS REQUIRED BY SECTION 4.4.9-E

____ PLACEMENT OF HMA BASE

____ PLACEMENT OF HMA INTERMEDIATE (BINDER)

____ PLACEMENT OF HMA SURFACE

____ PLACEMENT OF PCCP PAVEMENT

____ PLACEMENT OF SIDEWALK

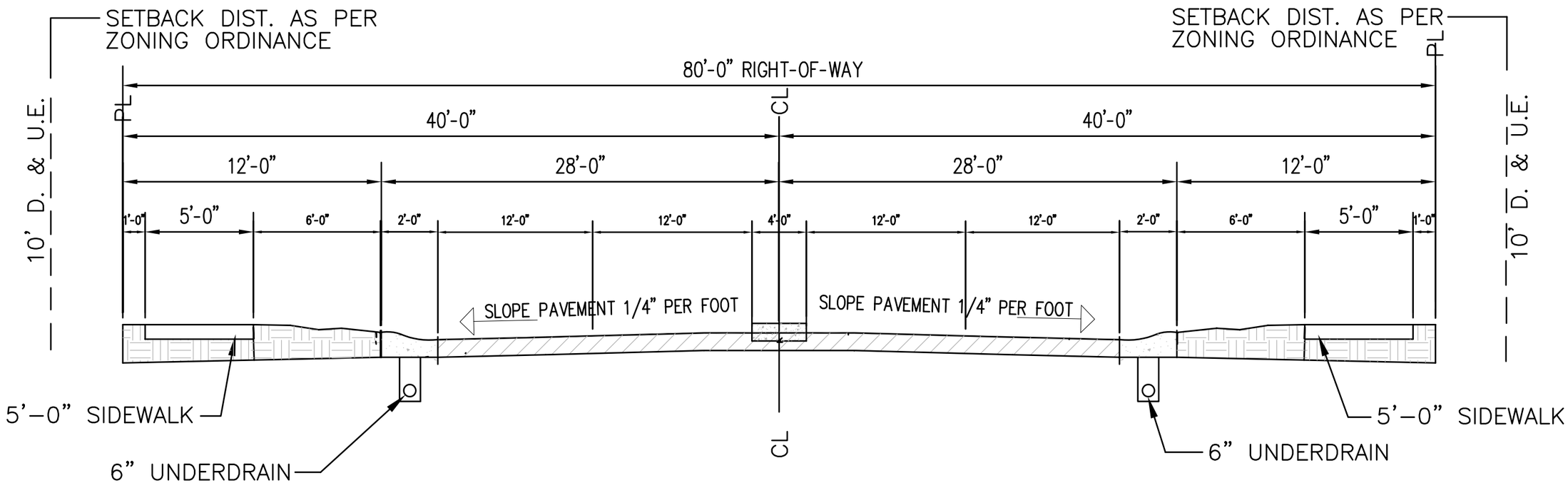

NOTE:

FOUR 12'-0" MOVING LANES, 4'-0" CENTER CURBS, NO PARKING LANES AS SHOWN ABOVE
OPTIONAL: ADD 8'-0" OF PAVEMENT FOR EACH PARKING LANE.

CITY OF BATESVILLE

STREET DETAILS		
PRIMARY ARTERIAL STREET SECTION		
SCALE: NONE	DATE: AUG. 2004	DWG. NO. ST-1

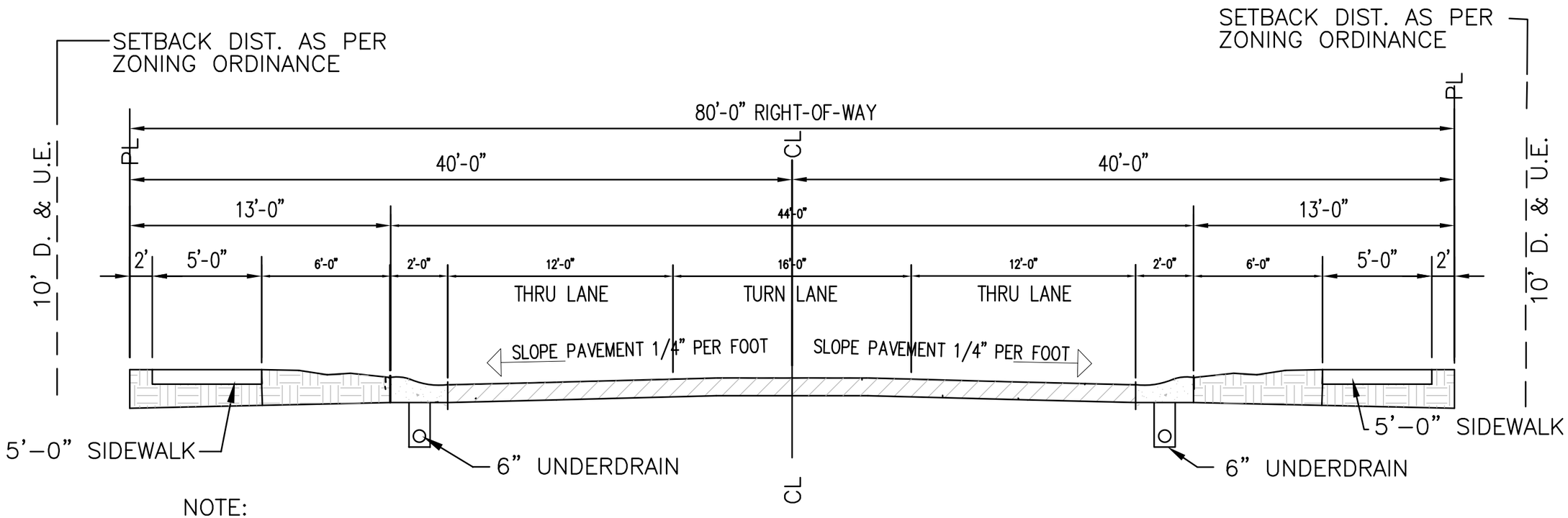

NOTE:
OPTIONAL: ADD 8'-0" OF PAVEMENT FOR EACH PARKING LANE.

CITY OF BATESVILLE

STREET DETAILS

SECONDARY ARTERIAL STREET SECTION

SCALE: NONE	DATE: AUG. 2004	DWG. NO. ST-2

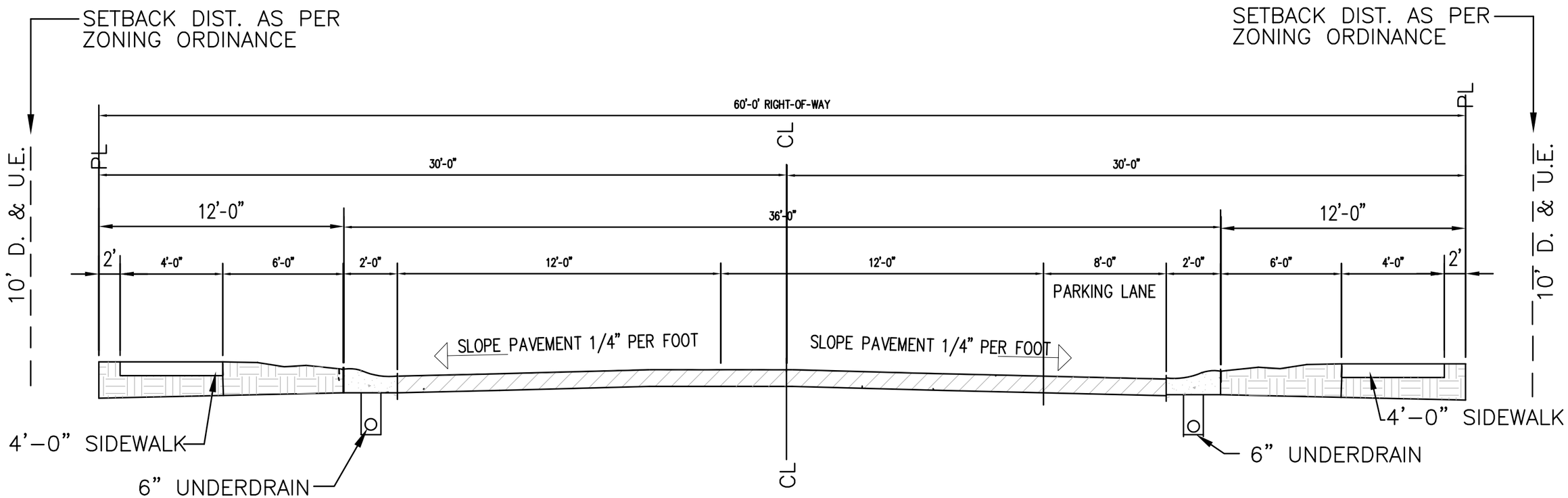

NOTE: TWO 12'-0" MOVING LANES AND ONE 8'-0" PARKING LANE AS SHOWN ABOVE.

CITY OF BATESVILLE

STREET DETAILS		
FEEDER STREET SECTION		
SCALE: NONE	DATE: AUG. 2004	DWG. NO. ST-3

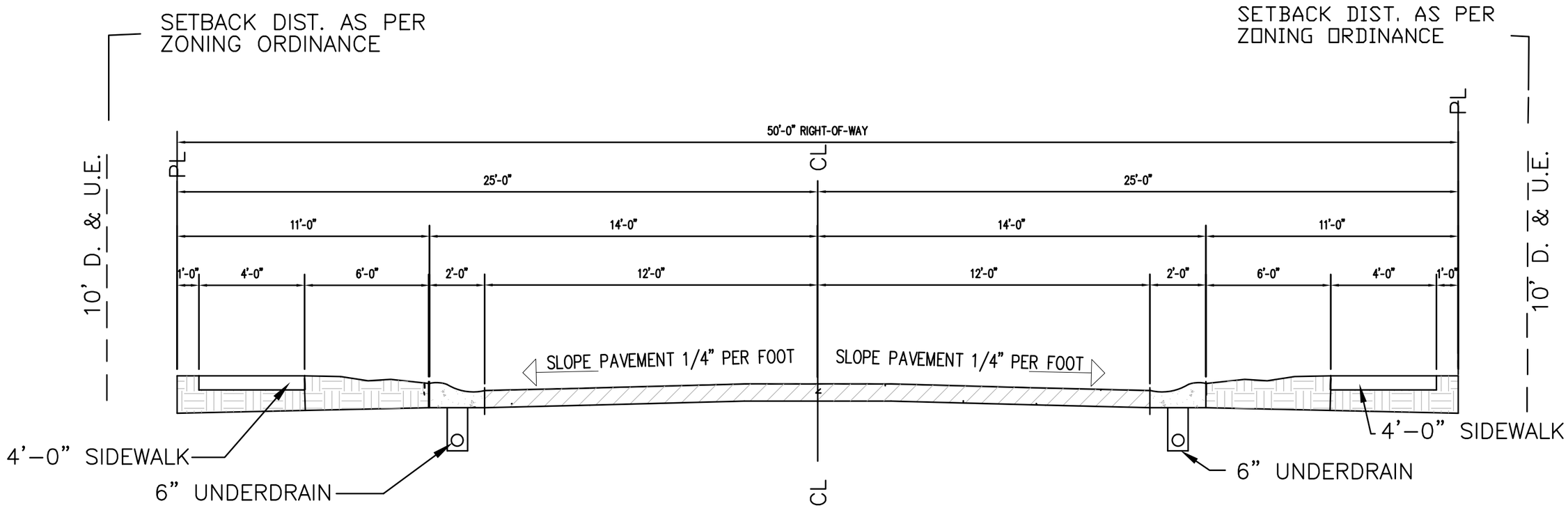

NOTE:
TWO 12'-0" MOVING LANES WITH NO PARKING LANE AS SHOWN ABOVE.
ALTERNATIVE, TWO 10'-0" MOVING LANES WITH ONE 8'-0" PARKING LANE.
SIDEWALKS ARE OPTIONAL UNLESS REQUIRED BY PLAN COMMISSION.

CITY OF BATESVILLE

STREET DETAILS		
RESIDENTIAL STREET SECTION		
SCALE: NONE	DATE: AUG. 2004	DWG. NO. ST-4

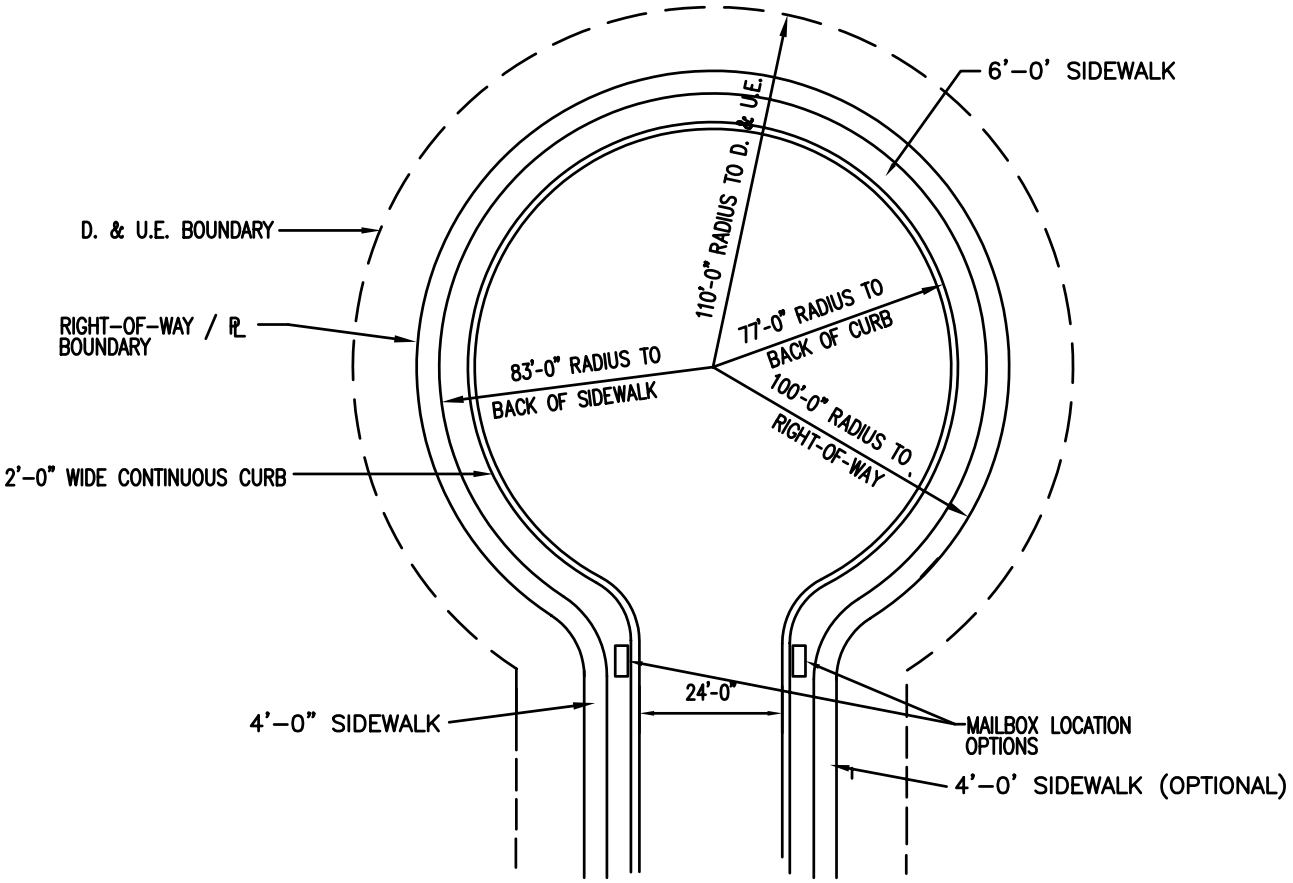

CITY OF BATESVILLE

STREET DETAILS		
CUL-DE-SAC TURNAROUNDS GEOMETRY		
SCALE: NONE	DATE: AUG. 2004	DWG. NO. ST-5

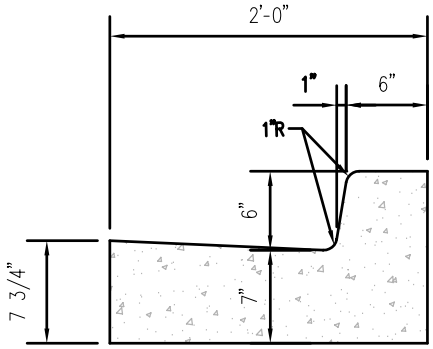

COMBINED CONCRETE CURB & GUTTER

NO SCALE

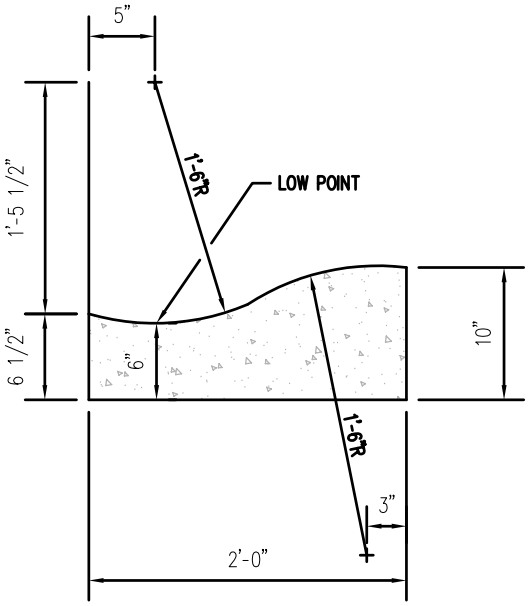

MOUNTABLE CURB & GUTTER

NO SCALE

CITY OF BATESVILLE

STREET DETAILS		
CURB & GUTTER SECTIONS		
SCALE: NONE	DATE: AUG. 2004	DWG. NO. ST-6

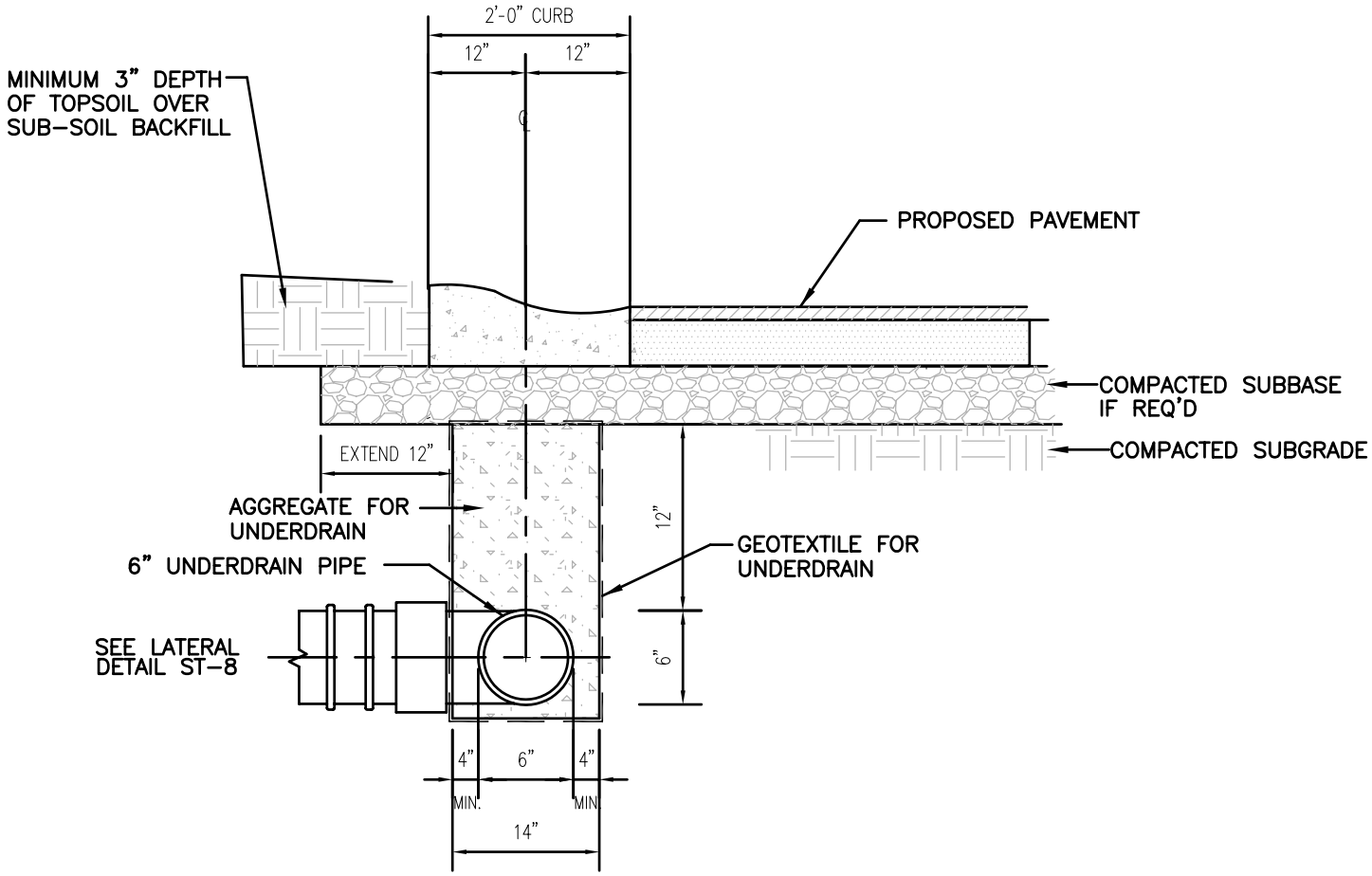

CITY OF BATESVILLE

STREET DETAILS

UNDERDRAIN SECTION

SCALE: NONE	DATE: AUG. 2004	DWG. NO. ST-7

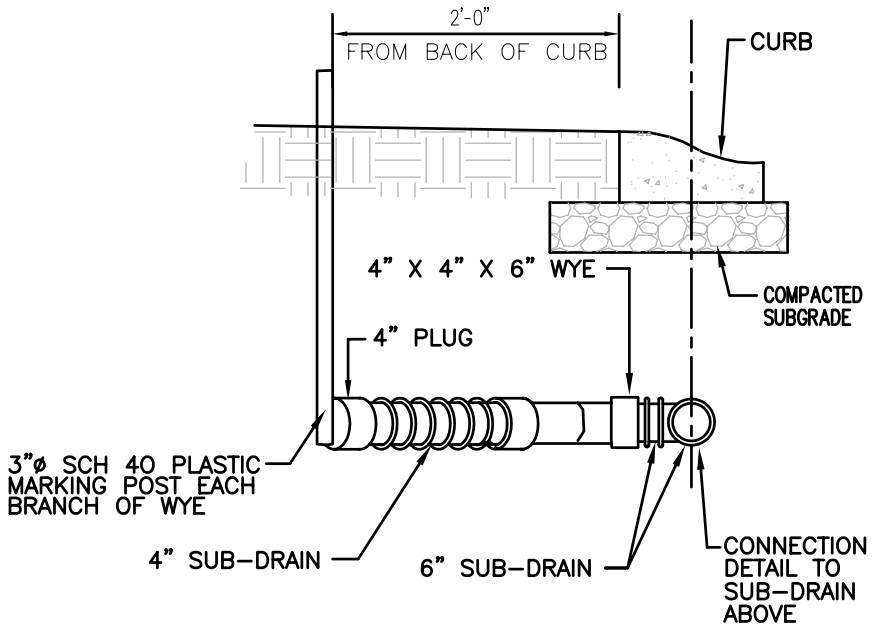

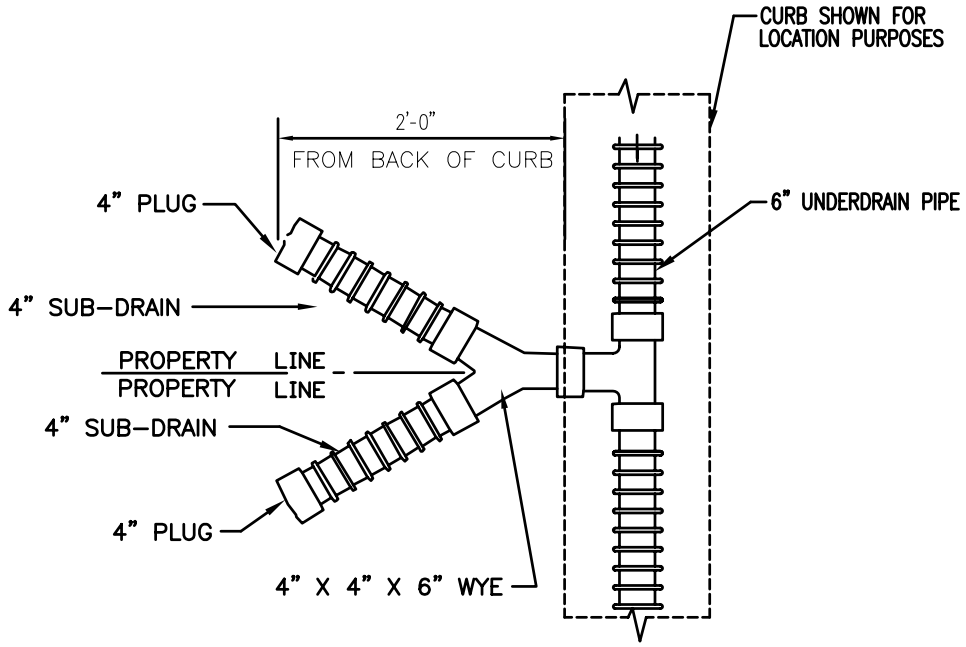

CITY OF BATESVILLE

STREET DETAILS		
TYPICAL UNDERDRAIN LATERALS		
SCALE: NONE	DATE: AUG. 2004	DWG. NO. ST-8

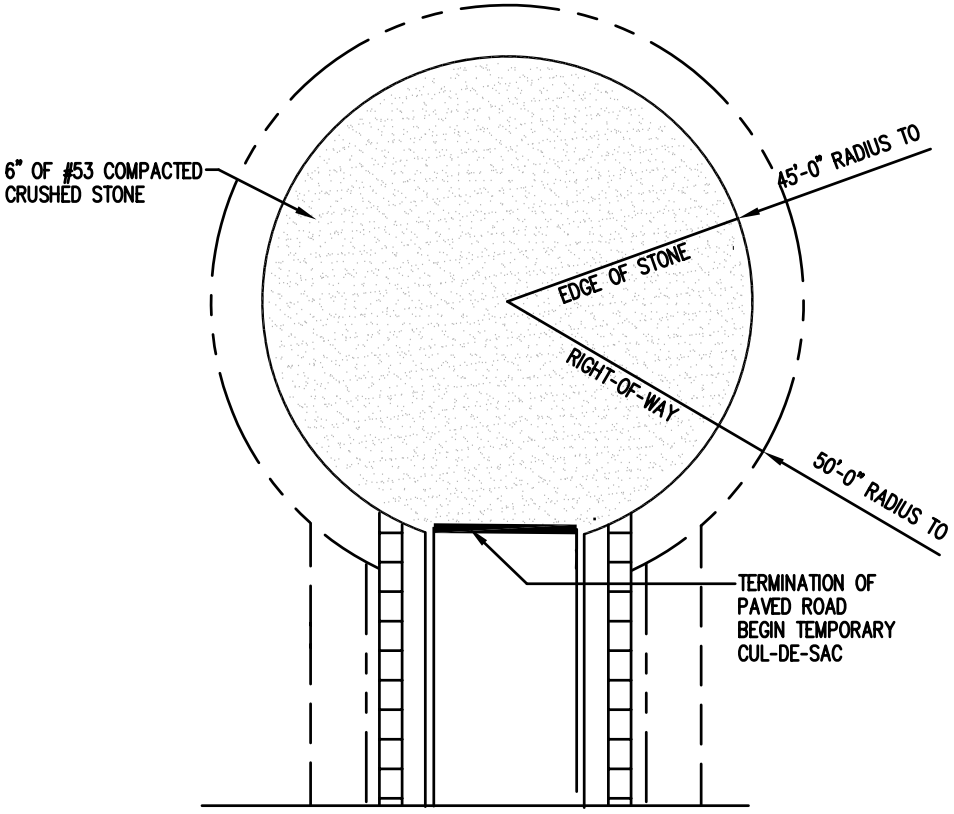

CITY OF BATESVILLE

STREET DETAILS		
TEMPORARY CUL-DE-SAC		
SCALE: NONE	DATE: AUG. 2004	DWG. NO. ST-9

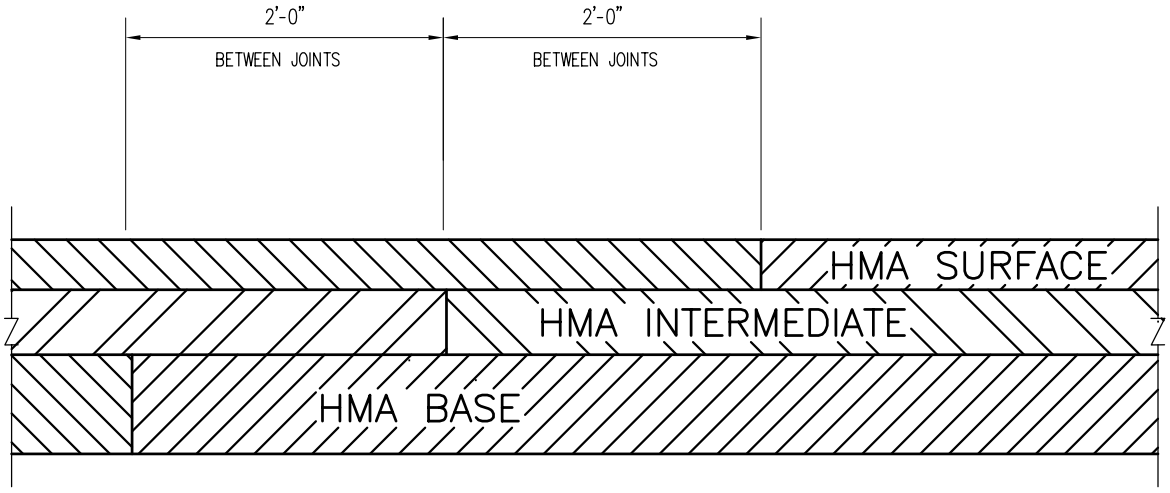

CITY OF BATESVILLE

STREET DETAILS		
COLD JOINTS - HMA PAVEMENT		
SCALE: NONE	DATE: AUG. 2004	DWG. NO. ST-10

INDOT DRAWINGS ADOPTED BY REFERENCE

INDOT Portland Cement Concrete Pavement

INDOT Type D-1 Contraction Joint	E 503-CCPJ-01
INDOT Longitudinal Joint	E 503-CCPJ-02
INDOT Longitudinal Joint	E 503-CCPJ-03
INDOT Longitudinal Keyway Joint	E 503-CCPJ-04
INDOT Transverse Construction Joint	E 503-CCPJ-05
INDOT Transverse Joint Seals	E 503-CCPJ-06
INDOT Longitudinal Construction Joint	E 503-CCPJ-07
INDOT Longitudinal Construction Joint	E 503-CCPJ-08

INDOT Sidewalks and Curb Ramps

INDOT Sidewalk Details	E 604-SDWK-01
INDOT Location Plan for Sidewalk Curb Ramps	E 604-SWCR-01
INDOT Sidewalk Curb Ramps General Notes & Details	E 604-SWCR-02
INDOT Sidewalk Curb Ramps Type A	E 604-SWCR-03
INDOT Sidewalk Curb Ramps Type B	E 604-SWCR-04
INDOT Sidewalk Curb Ramps Type C	E 604-SWCR-05
INDOT Sidewalk Curb Ramps Type D	E 604-SWCR-06
INDOT Sidewalk Curb Ramps Type E	E 604-SWCR-07
INDOT Sidewalk Curb Ramps Type F	E 604-SWCR-08
INDOT Sidewalk Curb's Ramps Type G and Type H	E 604-SWCR-09
INDOT Sidewalk Curb Ramps Type K	E 604-SWCR-10
INDOT Sidewalk Curb Ramps Type L	E 604-SWCR-11
INDOT Sidewalk Curb Ramp's Improved Access	E 604-SWCR-12