CITY OF BATESVILLE DEVELOPMENT & CONSTRUCTION STANDARDS MANUAL

CHAPTER 2
SANITARY SEWER SPECIFICATIONS

TABLE OF CONTENTS

Section	*Subject*	*Page*
2.1	GENERAL	2-1
2.1.1	Sanitary Sewer Construction, Connection to Public Sanitary Sewer	2-1
2.1.2	References	2-1
2.2	DESIGN CRITERIA	2-2
2.3	MATERIAL SPECIFICATIONS	2-3
2.3.1	Sewer Pipe	2-3
2.3.2	Pipe Materials, Gravity Sewers	2-3
2.3.3	Manholes	2-4
2.3.4	Joints, Fittings and Appurtenances for Gravity Sewers	2-5
2.3.5	Force Main Pipe, Pressure Sewer Pipe, and Fittings	2-5
2.3.6	Lift Stations	2-12
2.4	CONSTRUCTION REQUIREMENTS	2-14
2.4.1	Surface Conditions	2-14
2.4.2	Field Measurements, Surveys Lines, Reference Points & Grades	2-14
2.4.3	Installation of Pipe	2-14
2.4.4	General Trenching	2-19
2.4.5	Removal of Material	2-20
2.4.6	Stabilization	2-21
2.4.7	Backfilling	2-21
2.4.8	Compaction Testing	2-22
2.4.9	Installation of Manholes	2-23
2.4.10	Grade Adjustment of Existing Structures	2-25
2.4.11	Tests for Gravity Sanitary Sewers	2-25
2.4.12	Tests for Force Mains and Pressure Sewers	2-27
2.4.13	Manhole Testing	2-28
2.4.14	Restraining (for Force Mains and Pressure Sewers)	2-29
2.4.15	Installation of Pumps in Lift Stations	2-29
2.4.16	Record Drawings	2-30

LIST OF FORMS

Title	*Form No.*
Sewer Project Inspection Checklist	SS-A
Pressure Leakage Test - Force Mains	SS-B
Exfiltration Water Test For Gravity Sewers	SS-C
Infiltration-Inflow Test for Gravity Sewers	SS-D
Exfiltration Air Test For Gravity Sewers (Low Pressure Air Test)	SS-E
Precast Manhole Vacuum Test	SS-F
Mandrel Test	SS-G
Air Test	SS-H

LIST OF DRAWINGS

Title	*Drawing No.*
Type I Manhole	SS-1
Type II Manhole (For 36' - 96" Diameter Pipes)	SS-2
Type IV Manhole (Shallow Connection)	SS-3
Type V Manhole (Drop Manhole)	SS-4
Invert for Cast in Place Pipe and Base	SS-5
Invert Shapes	SS-6
Type "A" Manhole Casting Detail	SS-7
Type "J" Waterproof Manhole Frame with Bolted Lid and Gasket	SS-8
Combination Sewage Air Valve Structure	SS-9
Restraint of Bends	SS-10
Restraint Block Size for Various Degrees of Elbows & Sizes of Pipe	SS-11
Typical Lift Station Plan View	SS-12
Typical Lift Station Section View	SS-13
Typical Control Panel Support Detail, Typical Lift Station Electrical Riser Diagram	SS-14
Sewer Trench Detail	SS-15
Dissimilar Pipe Size Tap Connection	SS-16
Typical Lateral Detail for Sewers Deeper than 14’	SS-17
Typical Lateral Detail for Sewers Less than 14’ Deep	SS-18
Flexible Sewer Pipe Bedding Detail (Class I & II)	SS-19
Rigid Pipe Bedding Detail "Class C"	SS-20
Backfill Requirements (within R/W for Improved Streets)	SS-21
Backfill Requirements (For Crossing R/W for Improved Streets)	SS-22

SECTION 2.1: GENERAL

2.1.1 Sanitary Sewer Construction, Connection to Public Sanitary Sewer

A. Notify Batesville Wastewater Utility not less than seventy-two (72) hours before the start of construction. Batesville Wastewater Utility reserves the right to inspect all new sanitary sewer installations for compliance with the standards.

2.1.2 References

A. ASTM A48 - Standard Specification for Gray Iron Castings

B. ASTM A536 - Standard Specification for Ductile Iron Castings

C. ASTM C443 - Standard Specification for Joints for Concrete Pipe and Manholes, Using Rubber Gaskets

D. ASTM C478 - Standard Specification for Precast Reinforced Concrete Manhole Sections

E. ASTM C923 - Standard Specification for Resilient Connectors Between Reinforced Concrete Manhole Structures, Pipes and Laterals

F. ASTM C1244 - Standard Test Method for Concrete Sewer Manholes by the Negative Air Pressure (Vacuum) Test Prior to Backfill

G. ASTM D1556 - Standard Test Method for Density and Unit Weight of Soil in Place by the Sand-Cone Method

H. ASTM D1782 - Standard Test Methods for Operating Performance of Particulate Cation-Exchange Materials

I. ASTM D2167 - Standard Test Method for Density and Unit Weight of Soil in Place by the Rubber Balloon Method

J. ASTM D2241 - Standard Specification for Poly(Vinyl Chloride) (PVC) Pressure-Rated Pipe (SDR Series)

K. ASTM D2922 - Standard Test Methods for Density of Soil and Soil-Aggregate in Place by Nuclear Methods (Shallow Depth)

L. ASTM D3017 - Standard Test Method for Water Content of Soil and Rock in Place by Nuclear Methods (Shallow Depth)

M. ASTM D3034 - Standard Specification for Type PSM Poly(Vinyl Chloride) (PVC) Sewer Pipe and Fittings.

N. ASTM D3212 - Standard Specification for Joints for Drain and Sewer Plastic Pipes Using Flexible Elastomeric Seals

O. ASTM F477 - Standard Specification for Elastomeric Seals (Gaskets) for Joining Plastic Pipe

P. ASTM F679 - Standard Specification for Poly(Vinyl Chloride) (PVC) Large-Diameter Plastic Gravity Sewer Pipe and Fittings

Q. ASTM F949 - Standard Specification for Poly(Vinyl Chloride) (PVC) Corrugated Sewer Pipe With a Smooth Interior and Fittings

R. ASTM F1417 – Standard Test Methods for Installation Acceptance of Plastic Gravity Sewer Line Using Low-Pressure Air

S. AWWA C104/ANSI A21.4 - American National Standard for Cement-Mortar Lining for Ductile-Iron Pipe and Fittings for Water

T. AWWA C105/ANSI A21.5 - American National Standard for Polyethylene Encasement for Ductile-Iron Pipe Systems

U. AWWA C110/ANSI A21.10 - American National Standard for Ductile-Iron and Gray-Iron Fittings, 3 in. through 48 in. (75 mm through 1200 mm), for Water and Other Liquids

V. AWWA C111/ANSI A21.11 - Rubber-Gasket Joints for Ductile-Iron Pressure Pipe and Fittings

W. AWWA C151/ANSI A21.51 - American National Standard for Ductile-Iron Pipe, Centrifugally Cast, for Water

X. AWWA C600 - Standard for Installation of Ductile-Iron Water Mains and their Appurtances

Y. AWWA C900 - Polyvinyl Chloride (PVC) Pressure Pipe, 4 in. through 12 in., for Water Distribution

SECTION 2.2: DESIGN CRITERIA

A. Sanitary sewers shall be designed in accordance with the most current version of 327 IAC Article 3 "Wastewater Treatment Facilities; Issuance of Permits; Construction and Permit Requirements." An August 1, 2003 version of 327 IAC Article 3 is shown in Appendix B.

SECTION 2.3: MATERIAL SPECIFICATIONS

2.3.1 SEWER PIPE

A. All pipe shall conform to the applicable specifications and requirements set forth herein.

B. Pipe used in sanitary sewer construction shall be of ductile iron, solid PVC, or corrugated smooth walled interior PVC. All sanitary sewer pipe shall have flexible gasketed joints.

C. All pipe under surface water bodies shall be ductile iron or solid PVC with pressure gasketed joints.

D. All flexible (PVC) sanitary sewer pipe must meet a deflection test of 5%.

E. All PVC/DI pipe transitions shall be made with an approved mechanical ductile iron sleeve.

2.3.2 PIPE MATERIALS, GRAVITY SEWERS

A. Polyvinyl Chloride (PVC) Pipe
   1. Shall be Type PSM conforming to ASTM D3034 (latest edition) EXCEPT, no reworked material shall be used and shall have a cell classification of 12454-B as defined in ASTM D1782 (latest edition), and shall have an SDR (Standard Dimension Ratio) of not greater than 35. Shall be used for pipe sizes 15 inches and smaller.
   2. Or, shall conform in all respects to ASTM F679 with wall thickness limited to T-1. Shall be used for pipe sizes greater than 15 inches.

B. Ductile Iron Pipe
   1. Ductile Iron pipe shall conform to AWWA C151/ANSI A21.51. Pressure class, cement mortar lining, and bituminous coating shall be as specified in Section 2.3.5 for force main and pressure sewer pipe. This pipe shall be used when the gravity sewer is less than 10 feet horizontally or 18 inches vertically from a water main.

C. Pressure Gasketed Polyvinyl Chloride (PVC) Pipe
   1. Pressure gasketed PVC pipe shall conform to ASTM D2241 and shall have an SDR (Standard Dimension Ratio) of not to exceed 21. Reference Section 2.3.5 for force main pipes. This pipe shall be used when the gravity sewer is less than 10 feet horizontally or 18 inches vertically from a water main.

D. Corrugated Smooth Walled Interior PVC Pipe

1. Shall conform in all respects to ASTM F 949, latest edition.
2. Shall be used for pipe sizes greater than 15 inches.

2.3.3 MANHOLES

A. Reinforced Concrete
1. These structures shall be erected of precast, or cast in place, reinforced concrete sections to the shape of the manhole. Steps shall be cast in place in accordance with the standards as shown on the construction standards. The bottom of the structures shall be of either precast, poured in place, or monolithic bottom stack, with 3,000 psi concrete to conform to the plans and shall be at least eight (8) inches thick and shall be reinforced as shown on the construction standards.

B. Precast Manhole Components
1. Shall conform with ASTM C478, latest edition, and with design dimensions. Cones and sections shall be substantially free from fractures, large or deep cracks, and surface roughness. Slabs shall be sound and free from gravel pockets. All precast manhole components shall be manufactured by an experienced and reputable manufacturer whose precast manhole components have been used commercially for at least three (3) years.

C. Monolithic Concrete Manholes
1. Shall conform to the contract drawings and/or the construction standards. Walls and base dimensions shall be of approved thickness, and the maximum step spacing shall be sixteen (16) inches.

D. Manhole Joints
1. Sanitary sewer manholes shall have flexible rubber gasket joints in accordance with ASTM C443. In addition, a ½-inch extrudable preformed gasket shall be utilized at each joint.

E. Cast Iron Frames & Covers
1. Shall conform to the requirements of ASTM A48 for Gray Cast Iron, latest edition. The dimensions, weights, and finish preparation shall conform to the appropriate construction standards.

F. Steps
1. Manholes shall have steps installed. Steps shall be copolymer polypropylene plastic type with ½-inch grade 60 steel reinforcement meeting the requirements of ASTM C-478, Section 11. The steps shall be M.A. Industries PS-1, or equal

G. Adjustment Risers and Shims
1. Rubber adjustment risers and shims shall be Infra-Riser as manufactured

by GNR Technologies, or approved equal

2.3.4 JOINTS, FITTINGS AND APPURTENANCES FOR GRAVITY SEWERS

A. Joints for Sanitary Sewers
   1. Elastomeric seals for gasketed joints for corrugated PVC shall meet ASTM F477 and ASTM D3212.
   2. PVC pipe joints shall conform to ASTM D3212 "push on" type with a confined rubber gasket conforming to ASTM F477.

B. Fittings
   1. Unless otherwise specified, wye fittings shall be provided in the sanitary sewer main for each service sewer connections. Wyes shall be six (6) inches minimum inside diameter, unless otherwise specified or noted. All fittings shall be of the same material as the pipe. Material joining the fittings to the pipe shall be free from cracks and shall adhere tightly to each joining surface.
   2. PVC sewer fittings shall conform to the requirements of ASTM D3034 specifications. Six-, and eight-inch fittings shall be molded in one piece, with elastomeric joints and minimum socket depths as specified in Sections 6.2 and 7.3.2 of the D3034 specification. Fittings 10 inches and larger shall be molded or fabricated from pipe meeting ASTM D3034 with manufacturer's standard pipe bells and gaskets. For depths of bury through 15 feet, a minimum wall thickness of SDR 35 as defined in Section 7.4.1 of ASTM D-034 is required. For depths of bury greater than 15 feet, a minimum wall thickness of SDR 26 is required.
   3. The PVC fittings for corrugated pipe shall conform to ASTM F949, latest edition.
   4. PVC pressure piping fittings used shall meet ASTM D2241 applications. Ductile Iron piping fittings shall meet the AWWA C151/ANSI A21.51 applications.

C. Plug for Fittings
   1. All fittings shall be capped with a plug of the same material as the pipe, and gasketed with the same gasket material as the pipe joint. The plug shall be able to withstand all test pressures involved without leakage.

2.3.5 FORCE MAIN PIPE, PRESSURE SEWER PIPE, AND FITTINGS

A. Ductile Iron Pipe and Fittings
   1. Pipe
      a. Ductile iron pipe shall meet the requirements of AWWA C151/ANSI A21.51. Design and manufacture pipe for a working pressure of 150 psi plus 100 psi surge and a safety factor of 2 and a depth of cover indicated on the Drawings and specified in this Section. Minimum pressure class shall be as follows:

Size Range	Pressure Class
4"-12"	350
14"-20"	250
24"	200

b. Use cement mortar lining complying with AWWA C104/ANSI A-21.4.
c. Coat the inside and outside surfaces of all pipe, fittings, and adapters with bituminous coating. Outside coating shall meet the requirements of ANSI Specification A21.51 (AWWA Standard C151).d. Pipe joints shall be push-on type. Joints shall meet the requirements of AWWA C111/ANSI A21.11. Restrained joints shall be Lok-Ring, Lok-Fast, Lok-Tyte, or equal.

2. Fittings
   a. Fittings shall be ductile iron. Fittings shall meet the requirements of AWWA C110/ANSI A21.10. Design and manufacture fittings for a pressure rating of 150 psi.
   b. Fitting joints shall be mechanical joints or restrained push-on joints. Joints shall meet the requirements of AWWA C111/ANSI A21.11. Thrust block mechanical joints as indicated on the Drawings and specified in this Section. Restrained joints may be used instead of mechanical joints and thrust blocking. Provide stainless steel nuts, bolts, and rods for restraint of joints, fittings, bends, and valves below grade. Stainless steel Star tie bolt restraining system shall be used.

3. Adapters
   a. Adapters from ductile iron pipe to PVC pipe or flange joint valves or fittings shall be ductile iron. Adapters shall meet the requirements of AWWA C110/ANSI A21.10. Design and manufacture adapters for a pressure rating of 150 psi.
   b. Adapter ends connecting to ductile iron pipe shall have plain ends, push-on joints, mechanical joints, or restrained push-on joints. Adapters with plain ends, push-on joints, or mechanical joints may be used where restrained joints are not required. Adapters shall have restrained push-on joints where restrained joint piping is required. Mechanical joints and push-on joints shall meet the requirements of AWWA C111/ANSI A21.11. Restrained joints shall be Lok-Ring, Lok-Fast, Lok-Tyte, or equal.
   c. Adapter ends connecting to flange joint valves or fittings shall have joints complying with the specifications for the applicable valves or fittings.

4. Lining and Coating
   Line the inside surfaces of all pipe, fittings, and adapters with cement mortar lining and bituminous seal coat. Cement mortar lining and bituminous seal coat shall meet the requirements of AWWA

C104/ANSI A21.4. Coat the outside surfaces of all pipe, fittings, and adapters with bituminous coating. Outside coating shall meet the requirements of AWWA C151/ANSI A21.51.

5. Gaskets
   Gaskets for mechanical joints and push-on joints shall meet the requirements of AWWA C111/ANSI A21.11.

6. Nuts and Bolts
   a. Nuts and bolts for mechanical joints shall be high strength, heat treated, ductile iron. Nuts shall be hexagon nuts. Bolts shall be tee head bolts. Nuts and bolts shall meet the requirements of AWWA C111/ANSI A21.11.
   b. Nuts and bolts for restrained push-on joints shall meet the requirements of the joint manufacturer.

7. Polyethylene Encasement
   Polyethylene encasement for ductile iron pipe, fittings, and adapters shall meet the requirements of AWWA C105/ANSI A21.5.

B. Polyvinyl Chloride Pipe and Fittings, 4-inch & Larger
   1. Pipe
      a. Polyvinyl chloride pipe, 4-inch and larger, shall meet the requirements of AWWA C900, DR 14 (class 200), with the physical and chemical properties equal to or exceeding cell classification 12454B as defined in ASTM 1784.
      b. Polyvinyl chloride pipe shall have cast-iron-pipe-equivalent outside diameter.
      c. Pipe joints shall be push-on type. Joints shall meet the requirements of AWWA C900. Do not use weld cement joints.

   2. Fittings
      a. Fittings shall be ductile iron. Fittings shall meet the requirements of AWWA C110. Design and manufacture fittings for a pressure rating of 150 psi.
      b. Line the inside surfaces of fittings with cement mortar lining and bituminous seal coating. Cement mortar lining and bituminous seal coating shall meet the requirements of AWWA C104/ANSI A21.4. Coat outside surfaces of fittings with bituminous coating. Outside coating shall meet the requirements of AWWA C110/ANSI 21.10.
      c. Fitting joints shall be mechanical joints. Mechanical joints shall meet the requirements of AWWA C111/ANSI A21.11. Provide stainless steel nuts, bolts, and rods for restraint of joints, fittings, bends, and valves below grade. Stainless steel star tie bolt restraining system shall be used.

3. Adapters
   a. Adapters from polyvinyl chloride pipe to flange joint valves or fittings shall be ductile iron. Adapters shall meet the requirements of ANSI/AWWA C110. Design and manufacture adapters for a pressure rating of 150 psi.
   b. Line the inside surfaces of adapters with cement mortar lining and bituminous seal coating. Cement mortar lining and bituminous seal coating shall meet the requirements of ANSI/AWWA C104/A21.4. Coat outside surfaces of adapters with bituminous coating. Outside coating shall meet the requirements of ANSI/AWWA C110.
   c. Adapter ends connecting to polyvinyl chloride pipe shall have plain ends or mechanical joints. Mechanical joints shall meet the requirements of ANSI/AWWA C111/A21.11.
   d. Adapter ends connecting to flange joint valves or fittings shall have joints complying with the specifications for the applicable valves or fittings.

4. Gaskets
   a. Gaskets for polyvinyl chloride push-on joints shall meet the requirements of ANSI/AWWA C900.
   b. Gaskets for mechanical joints shall meet the requirements of ANSI/AWWA C111/A21.11.
   c. Sleeves for transitioning from D.I. to PVC shall be mechanical joint Class 350 ANSI/AWWA C153/A21.53.

5. Nuts and Bolts
   Nuts and bolts for mechanical joints shall be high strength, heat treated, ductile iron. Nuts shall be hexagon nuts. Bolts shall be tee head bolts. Nuts and bolts shall meet the requirements of ANSI/AWWA C111/A21.11.

C. Polyvinyl Chloride Pipe and Fittings, Smaller than 4-inch
   1. Usage of this pipe shall be determined on a case-by-case basis, as approved by Batesville Wastewater Utility.

   2. Pipe
      a. Comply with ASTM D2241 requirements, with a working pressure of 200 psi and SDR-21 unless otherwise specified.

      b. Use push on joints complying with ASTM D3139, with which the elastomeric ring is manufactured in compliance with ASTM F477.

   3. Fittings
      a. Use ductile iron fittings and specials suitable for 150 psi pressure rating unless otherwise specified. Threaded pipefittings shall not be allowed.

D. Polyethylene Pipe and Fittings

1. Pipe

   a. High-density polyethylene pipe (HDPE) shall meet the requirements of AWWA C901 for pipe 1.50-inch to 3 inches. HDPE pipe shall meet AWWA C906 for pipe 4 inch to 6 inch. Cell classification shall be 345444C. Dimension ratio shall be 11. Design and manufacture pipe for a working pressure of 160 psi and a depth of cover indicated on the Contract Drawings and specified in this Section.

   b. Polyethylene pipe shall have ductile iron pipe equivalent outside diameter.

   c. Polyethylene pipe shall have an inside diameter that shall meet or exceed the diameter of the force main or pressure sewer pipe shown on the Plans

   c. The pipe shall contain no recycled compound except that generated in the manufacturer's own plant from resin of the same specification from the same raw material.

2. Fittings

   a. Fittings shall be manufactured in accordance with the reference standards listed in this specification and the material type and design pressure and temperature ratings specified on the piping spool drawings.

   b. Fittings shall be manufactured by the same manufacturer as the pipe to which fusion bonding is intended, using identical materials.

   c. Fittings shall be manufactured to meet the same pressure rating as the pipe. The pipe DR shall be used to determine the fitting pressure rating requirements.

   d. Fittings shall be manufactured in facilities designed for that purpose. Field-fabricated fitting shall not be allowed.

3. Flange Backup Rings and Gaskets

   a. Flange backup rings shall be of the type and pressure rating shown on the piping spool drawings.

   b. Ductile iron backup rings shall be of the convoluted type, fabricated from ductile iron per ASTM A 536, grade range 60/40/18 to 65/45/12. Ductile iron flange backup ring bolting dimension shall

conform with ANSI B16.5 Class 150.

c. Backup rings shall be finished as cast with flash removed from all edges and bolt holes to the specified dimensions. Additional finish requirements, if any, shall be as noted on the piping spool drawings and in accordance with the following:
   (1) Epoxy coated, with Bitumastic 300M High Build Coal Tar Epoxy per manufacturer's recommendations.

   (2) Gaskets shall be of the type and thickness shown on the piping spool drawings. Gasket materials shall be compatible with the service of the piping system. Asbestos gaskets will not be allowed.

4. Fusion Bonding Procedure
   a. Piping joints other than those shown as flanged or otherwise mechanically connected shall be butt fusion bonded in accordance with a written bonding procedure specification (BPS) as required by ANSI/ASME B31.3, Chapter VII, paragraph A-328. BPS shall include cutting and facing requirements.

   b. Materials to be fusion bonded shall be from the same manufacturer.

   c. Bonders and bonding operators shall be qualified in the use of the BPS as required by ANSI/ASME B31.3, Chapter VII, paragraph A-328. Qualification records certifying that bonders and bonding operators employed to complete fusion bonding are qualified in the BPS shall be submitted prior to commencement of fusion bonding work.

   d. Bonding equipment specified in the BPS shall be in proper operating condition. Equipment heater performance shall be tested and certified prior to use for fusion bonding. Bonders and bonding operators shall be qualified for the specific bonding equipment utilized in the fusion bonding work.

5. Quality Assurance
   a. The pipe and fittings manufacturer shall have an established quality control program responsible for inspecting incoming materials and outgoing pipe and fittings and components. Incoming polyethylene materials shall be inspected for density per ASTM D-1505 and melt flow rate per ASTM D-1238, and contamination. All incoming materials shall be certified by the supplier. Certifications shall be verified by the pipe manufacturer and submitted to the Engineer.

6. Markings
    a. During the extrusion production, the HDPE pipe shall be continuously marked with durable printing noting the nominal pipe size, dimension ratio, pressure rating, trade name, material classification, certification bases and date.

    b. All pressure sewer pipe shall be of the same color throughout the project. If electrical conduits are required the no duplication of the color coding shall be used in the same trench or directional drilling pull.

E. Tracer Wire for Polyvinyl Chloride and High-Density Polyethylene Pipe
1. Provide an electrically continuous insulated 10-gauge solid copper insulated tracer wire in the trench above the pipe, fastened to the pipe at 20-foot intervals. The wire shall come above ground at every structure. There shall be an 18" minimum lead of wire left at the top of the structure. All underground connections shall be made with brass split nuts, and sealed or taped.

F. Combination Sewage Air Valves (CSA)
1. Shall be dual function: venting large volumes of air through the large orifice and small pockets of air through the small orifice before shutting off. Thereafter, while the air valve is pressurized, pockets of air collecting will be vented through the small orifice automatically.
2. The combination sewage air valve shall consist of an independent large orifice air and vacuum valve with an independent small orifice air release valve. The small orifice air valve shall be separated from the large orifice air valve by a 2-inch solid bronze gate valve. The large orifice air valve shall incorporate one upper and one lower stainless steel float, thereby maintaining an air gap between the bottom float and upper shut-off float.
3. The combination sewage air valve shall be fitted with inlet isolation valves to isolate the air release valve from the air and vacuum valve, and to isolate the air and vacuum valve from the force main. The combination sewage air valve shall also be fitted with two blow-off valves, two flush valves, and a minimum of 5 feet of rubber hose with quick disconnects for back-flushing.

4. Materials
    a. Body, Cover & Baffle - Cast Iron
    b. Internal Parts & Linkage - Stainless Steel (Series 300)
    c. Float & Float Guide - Stainless Steel (Series 300)
    d. Seats and Needles - Buna-N
    e. Exterior Paint - Phenolic Primer Red Oxide

2.3.6 LIFT STATIONS

A. Pumps
   1. Pumps shall be submersible, non-clog wastewater pumps manufactured by Flowserve (represented by Quality Repair Service, Greenwood, Indiana) or approved equal.
   2. Each pump shall be furnished with a submersible electric motor connected for operation with submersible cable (SUBCAB) suitable for submersible pump applications. The power cable shall be sized according to NEC and ICEA standards and also meet P-MSHA approval.
   3. The pumps, electrical system and components shall meet the requirements for Class I, Group D, Division 1 for installation an explosion hazard environment.

B. Level control floats shall be weighted floats with mercury contacts, 24 volts, meeting the requirements for Class I, Group D, Division 1, or "intrinsically safe" for installation an explosion hazard environment.

C. Slide Rail System
   1. The pump(s) shall automatically connect to discharge connection(s) when lowered into place on a single guide rail system, requiring no bolts, nuts, or fasteners to effect proper sealing.
   2. Each system shall consist of one FRP Extrusion or stainless steel I-Beam or two stainless steel pipes guide rail supported at the top by an upper guide bracket and at the bottom by the discharge connection and intermediate supports as required. The guide rail base shall be equipped with a vertical straightening vane which properly aligns the slot in the pump bracket and centers the pump just prior to final seating. Ease and quick removal of pumps from other than the vertical direction over the center of the pump shall be a requirement of the system.

D. Control System
   1. The raw sewage pump system shall be controlled with one pump being available for service at any time.
   2. The pump control system shall be of the duplex type consisting, at a minimum, of the following components:
      a. Pump short-circuit protection
      b. Pump thermal overload protection
      c. Motor contactor
      d. Control transformer
      e. Control transformer short-circuit protection
      f. Control relays
      g. Pump and control terminal blocks
      h. Door-mounted run lights and HOA switches
      i. NEMA 4X enclosure and mounting components
      j. 120 volt GFI receptacle with 20 amp circuit breaker
      k. Pump seal leak detector probe

l. Phase sequence/phase loss/under-voltage protection assembly with adjustable voltage settings
m. Lighting/surge arresters on the main incoming power buss
n. Main breaker for incoming power

3. The control system shall be designed to operate with all submersible pumps based on wet well level monitored by level sensors. The control system shall include automatic pump alternation, auxiliary contacts for pump thermal overload protection, and door-mounted pilot lights. Additionally, pump hour meters for each pump shall be provided.
4. The entire control system shall be housed in a NEMA 4X enclosure suitable for out-of-doors mounting near the pump station as directed by Batesville Wastewater Utility. The enclosure shall also house all circuit breakers, disconnect switches, elapsed time meters, lights, transformers, relays, and other devices necessary to provide a complete working installation.
5. The control system shall also provide an auto dialer notification of high water condition and/or pump failure. Alarm indication shall be panel-mounted flashing red light and audible horn. The auto dialer shall be Elite DIN8 by Antx, Inc., Round Rock, Texas. External surge protections shall be provided for the A/C main and phone lines for surge and lightening protection.

E. Mechanical
1. Plug valves shall be provided in the valve pit, shall meet all applicable AWWA standards, and shall be as manufactured by the DeZurik Unit of General Signal or approved equal.
2. Check valves shall be provided in the valve pit between the wet well and the plug valves. Check valves shall be iron body, swing flex, swing check, long pattern design, bolted cover, flanged ends, 300-pound test, AWWA Standard, suitable for use in a horizontal position with a spring and lever design. Flanges shall be drilled and faced for 125-pound American Standard.
3. All discharge piping inside the wet well and valve pit shall be ductile iron with flanged fittings. All piping shall be coated with a suitable painting system.
4. Furnish with each submersible pump one complete lift system. The system shall consist of a minimum of 20 feet of stainless steel cable, short length of high tensile strength proof-tested stainless steel lifting chain and stainless steel Grip-Eye provided and connected to each pump. Also provide one mechanical lifting device (portable hoist) capable of lifting and removing any of the submersible pumps. Lifting device shall be appropriately sized for weight of pump to be lifted. Lift system shall be Thern, Inc., U.S. Fabrication, Inc., or approved equal.

F. Access Hatch
   1. Access hatches for wet well and valve vault (if required) shall be constructed of aluminum diamond plate reinforced on the underside to be capable of withstanding a live load of 300 pounds per square foot.
   2. Access cover shall be equipped with hinges bolted to underside of cover with tamperproof fasteners. The cover shall open to 90 degrees and lock automatically in that position by a positive locking arm.
   3. Access cover shall be equipped with a locking hasp. Covers shall have a lifting handle for opening and closing of handle. All hardware shall be of stainless steel (where applicable).
   4. All aluminum frame and covers shall be furnished with a bituminous coating applied to the exterior of the frame that comes in contact with concrete.
   5. Acceptable manufacturers: Bilco JD or equal.

SECTION 2.4: CONSTRUCTION REQUIREMENTS

2.4.1 SURFACE CONDITIONS

A. Examine the areas and conditions under which work of this section will be performed. Correct conditions detrimental to timely and proper completion of the Work. Do not proceed until unsatisfactory conditions are corrected.

2.4.2 FIELD MEASUREMENTS, SURVEY LINES, REFERENCE POINTS & GRADES

A. Make necessary measurements in the field to assure precise fit of items in accordance with the approved design.

B. Service Laterals
   Provide a written log of location and depth of service connection from the nearest downstream manhole, measured from the center of the manhole lid, shall be kept and transmitted to the Batesville Wastewater Utility Inspector. This data shall include the length and depth of service line from main line to service end. Sanitary sewer service shall be placed from main line sewer to 5-feet beyond the right-of-way line, or to the edge of the indicated easement, whichever is farther. All service lines shall be adequately marked with a 2” x 4” wooden board extending from the service line capped end vertical and exposed 2-feet above ground.

2.4.3 INSTALLATION OF PIPE

A. Trenching
   1. All poles, fences, sewer, gas, water or other pipes, wires, conduits, manholes, buildings, structures, and property in the proximity of any

excavation shall be supported and protected from damage by the Contractor during construction.

2. Wherever sewer, gas, water or other pipes or conduits cross the excavation, the Contractor shall support said pipes and conduits without damage to them and without interrupting their use during the progress of the Work. The manner of supporting such pipes, etc., shall be subject to review by Batesville Wastewater Utility.
3. All property shall be thoroughly cleaned of all surplus materials, earth, and rubbish placed thereon by the Contractor.
4. The Contractor shall notify Batesville Wastewater Utility and the appropriate utility companies at least seventy-two (72) hours prior to the start of construction.
   a. The Contractor shall coordinate all utility companies' location of any existing underground utilities and structures within the site limits.
   b. The Contractor, prior to the start of construction, shall verify the location of any existing underground utilities and structures within the site limits. It is the Contractor's responsibility to make any and all exploratory investigation which may be necessary to verify or locate the utility pipe, wires, structures and appurtenances of others.

B. Location:
   1. Locate gravity sewers:
      a. Not closer than ten feet from a water supply main or service line (measured edge to edge). The edge of manholes shall not be less than 8 feet from the edge of any water supply main or water service line.
      b. Where the bottom of the water pipe will be at least 18 inches above the top of the sewer pipe, the horizontal spacing shall be a minimum of ten feet.
      c. Where the gravity flow sewers cross above water lines, pressure pipe with no joint closer horizontally than 60 inches from the crossing shall be installed.

   2. Locate force mains:
      a. As indicated for gravity sewers above.
      b. For special conditions where 10-foot separation of force main and water main is not possible, this requirement may be waived provided the water main is in a separate trench or on an undisturbed earth shelf on one side of the force main and at an elevation so the bottom of the water main is at least 18 inches above the top of the sewer, as approved by Batesville Wastewater Utility.

C. Laying Pipe
   1. All pipe shall be reinspected for soundness and damage due to handling immediately before being lowered into the trench. Any pipe found to be unsound or damaged will be rejected and shall be removed immediately

from the site of the work.

2. All pipe shall be laid accurately to the required line and grade and in such manner as to form a close, concentric joint with the adjoining pipe and to bring the invert of each section to the required grade. Bell holes shall be dug in advance of the pipe being laid as required. The supporting of the pipe on blocks will not be permitted.
3. Gravity sewer pipe laying shall proceed upgrade, beginning at the lower end of the sewer.
4. All open ends of pipes and branches shall be sealed with plugs or bulkheads firmly held in place.
5. At the end of each day's work, the open ends of all pipes shall be satisfactorily protected against the entrance of animals, earth, or other materials.
6. Each length of section shall be properly pulled or shoved "home" with a winch or come-a-long against the section previously laid to make a proper joint. The pipe shall then be securely held in position during the backfill operations. Joints shall not be pulled or cramped more than the design of the joint will permit and so as not to injure the conduit.
7. Lay force main pipe to a depth of not less than 4 feet of cover. Cover shall be measured from the top of the pipe to the finish grade elevation.
8. Lower pipe, fittings, and valves into the trench by hand, by means of hoists or ropes, or by other suitable tools or equipment which will not damage products, coatings, or linings. Do not drop or dump pipe, fittings, or valves into the trench.
9. Provide thrust restraint at horizontal and vertical deflection fittings and at tees, plugs, tapping sleeves, and tapping saddles.
10. Laying of ductile iron piping shall meet the requirements of ANSI/AWWA C600, unless otherwise specified in this Section.
11. Open excavation shall be satisfactorily protected at all times. At the end of each day's work, the open ends of all pipes shall be protected against the entrance of animals, children, earth, or debris by bulkheads or stoppers. The bulkheads or stoppers shall be perforated to allow passage of water into the installed pipe line to prevent flotation of the pipe line. Any earth or other material that may find entrance into the main sewer or into any lateral sewer through any such open end of unplugged branch must be removed at the Contractor's expense.

D. Setting Valves and Valve Boxes

1. Clean the interiors of valves of foreign matter before installation. Tighten stuffing boxes. Inspect valves in opened and closed positions to insure all parts are in working conditions.
2. Set buried valves and valve boxes plumb. Center valve boxes on the valves or valve operators. Locate valves outside the area of roads and streets where feasible, or where shown on the drawings. Tamp backfill around each valve box to a distance of four feet on all sides of the box, or to the undisturbed trench face if less than four feet.

E. Dewatering
   1. Dewatering sufficient to maintain the water level below the surface of the trench bottom shall be accomplished prior to pipe laying and jointing. The dewatering operation, however accomplished, shall be carried out so that it does not destroy or weaken the strength of the soil under or alongside the trench. When the dewatering operation is ended, the trench shall be replaced in such a manner so as not to disturb the pipe and its foundation.

F. Backfill Materials
   1. Granular Backfill shall be No.8 stone. No. 8 stone shall comply with Section 904 of the INDOT Standard Specifications, current edition.
   2. Earth backfill material shall contain no more than 5% organic material, no particles larger than four inches, and shall be free of trash, rubble and debris. The Plastic Index of the fraction passing the No. 40 sieve shall not be more than 25.
   3. Coarse aggregate material shall be No. 53 or 73 complying with Section 904 of the INDOT Standard Specifications, current edition.
   4. Flowable fill shall be in accordance with Section 213 of the INDOT Standard Specifications, current edition.
   5. Geotextile for use with No. 8 Stone shall be per Section 913.19 of the current INDOT specifications.

G. Bedding, Rigid Pipe
   1. Each pipe shall be laid in Class "B" bedding unless specifically noted otherwise, as shown on the plans and the construction standard drawings. All costs for bedding shall be included in the cost of the sewer pipe.
      a. Definition of Terms for Bedding Explanation

         Bc = Outside diameter of pipe, in inches
         D = Inside diameter of pipe, in inches
         d = Depth of bedding material below the pipe bell, in inches

         The values of "d", depth of bedding material below the bell of the pipe shall be as follows:

"D" (inside dia. of pipe, in.)	"d" (depth of bedding material) Minimum Requirements
27" and smaller	3"
30" and larger	4"

   2. Class "A" Bedding (Concrete Cradle)
      a. Class "A" bedding is that method of bedding in which the conduit is set on "d" inches of concrete in an earth foundation and encased in concrete up to 1/4" of "Bc" to fit the lower part of the conduit's exterior

breadth. The remainder of the conduit is to be surrounded to a height of at least twelve (12) inches above its top by densely compacted granular backfill material carefully placed by hand to completely fill all spaces under and adjacent to the conduit. The fill to be tamped thoroughly on each side of the conduit, as far as practicable, shall be in layers not to exceed six (6) inches in thickness.

b. The concrete used for Class "A" bedding shall be plain concrete with a 28-day compressive strength of 3,000 psi, unless otherwise specified. Refer to "Sanitary Sewer Construction Details" of the Construction Standards for further details on Class "A" bedding.

3. Class "B" Bedding
   a. Class "B" bedding is that method of bedding in which the conduit is set on "d" inches of a fine granular material (sand cushion) in an earth foundation, carefully shaped to fit the lower part of the conduit exterior for a width of at least 60% of the conduit's breadth. The remainder of the conduit is to be surrounded to a height of at least twelve (12) inches above its top by densely compacted granular backfill material carefully placed by hand to completely fill all spaces under and adjacent to the conduit. The fill to be tamped thoroughly on each side and under the conduit, as far as practicable, in layers not to exceed six (6) inches in thickness. Bell excavation is to be provided. Refer to "Sanitary Sewer Construction Details" of the Construction Standards for further details on Class "B" Bedding.
   b. Class "B" bedding material shall meet the gradation as set forth in the Indiana Dept. of Transportation Standard Specifications, current edition, Section 211, Special Fill & Backfill (No. 5 crushed stone), except that no more than 12% or less than 5% shall pass the No. 200 sieve (silt or clay). No. 8 stone per Section 904 of the current INDOT specifications shall also be allowed.

4. Class "C" Bedding
   a. Class "C" bedding is that method of bedding in which the conduit is set on an earth foundation, carefully shaped to fit the lower part of the conduit exterior for a width of at least 50% of the conduit's breadth. The remainder of the conduit is to be surrounded to a height of at least twelve (12) inches above its top by lightly compacted granular backfill material carefully around the exterior of the conduit. Bell excavation is to be provided. Refer to " Sanitary Sewer Construction Details " of the Construction Standards for further details on Class "C" Bedding.

H. Bedding, Flexible Pipe
   1. Each pipe shall be laid in a Class I or Class II bedding, as shown on the construction details. Pipe bedding material and installation shall conform to ASTM D2321.

I. Sewer Line Connections
   1. Sewer line connections to trunks, mains, laterals or side sewers shall be left uncovered until after an acceptance inspection has been made by the Batesville Wastewater Utility inspector. After approval of the connection, the bare pipe shall be covered with compacted granular material to a minimum depth of twelve (12) inches above the crown of the pipe. The trench shall then be fully backfilled as required. No existing storm sewer, storm drain, drain tile, or sump type tile shall be connected to a sanitary sewer.

J. Sheet Piling
   1. Sheet piling (permanent or temporary) shall be provided as required at the Contractor's expense, for construction in areas where wide excavations cannot be permitted, or for an excavation that is open for an extended period, or where soil conditions dictate to protect adjacent structures, roadways and utilities.
   2. The section modulus of piling sections shall be as required to function properly as intended.
   3. Piling sections shall be marked for length and sorted and stacked at the job site to prevent distortion and to facilitate proper sequence of setting and driving.
   4. Interlocks shall be protected from becoming obstructed by sand, gravel, mud, or other materials.
   5. Pile tips are approved for use at the Contractor's option.

2.4.4 GENERAL TRENCHING

A. Unless otherwise directed or permitted, not more than one hundred feet (100') of any trench shall be open at any time.

B. Surface encumbrances, located so as to create a hazard to employees involved in excavation work or in the vicinity thereof at any time during operations, shall be removed or made safe before excavating is begun.

C. During excavation, material satisfactory for backfilling shall be stockpiled in an orderly manner at a distance from the banks of the trench sufficient to avoid overloading and to prevent slides and cave-ins. Adequate drainage shall be provided for the stockpiles and surrounding areas by means of ditches, dikes, or other approved methods. The stockpiles shall also be protected from contamination with unsatisfactory excavated material or other material that may destroy the quality and fitness of the suitable stockpiled material. If the Contractor fails to protect the stockpiles and any material becomes unsatisfactory as a result, such material, if directed by the Batesville Wastewater Utility, shall be removed and replaced with satisfactory on-site or imported material from approved sources.

D. Grading shall be done as may be necessary to prevent surface water from flowing into the excavation, and any water accumulating therein shall be removed so that the stability of the bottom and sides of the excavation is maintained. In wet trenches dewatering equipment shall be operated ahead of pipe laying and the water level kept below the pipe invert.

E. The trench shall be excavated as shown in these Standards or as recommended by the manufacturer of the pipe to be installed, whichever is more stringent. Trench walls below and above the top of the pipe shall be sloped, or made vertical, as recommended in the manufacturer's installation manual. The trench width below an elevation one foot above the top of pipe shall not exceed that recommended in the installation manual. Where no manufacturer's installation manual is available, trench walls below an elevation one foot above the top of pipe shall be vertical and trench walls one foot or more above the top of pipe shall be adequately sloped as required to prevent slides and cave-ins unless proper precautions, as stipulated by OSHA, are taken. If adequate trench slopes cannot be provided in the available work space and right-of-way limits, then use of sheeting and shoring and/or a trench box is mandatory.

F. Excavation for manholes or similar structures shall be sufficient to leave at least 12 inches clear between the outer structure surfaces and the face of the excavation or support members and be of sufficient size to permit the placement and removal of forms for the full length and width of structure footings and foundations. When concrete is to be placed in an excavated area, special care shall be taken not to disturb the bottom of the excavation. Excavation to the final grade level shall not be made until just before the concrete is to be placed.

G. Dust conditions shall be kept to a minimum by the use of water. The use of salt or calcium chloride will not be permitted.

H. The Contractor shall saw cut hard surfaces along straight lines when trenching occurs in pavement, sidewalks, or driveways. Upon completion of backfilling and compaction testing, the Contractor shall replace in kind all pavements and surfaces encountered and match original elevations, lines, and grades.

2.4.5 REMOVAL OF MATERIAL

A. As trenches are backfilled, the Contractor shall remove all surplus material, regrade and leave clear, free, and in good order all roadways and sidewalks affected by the construction of the work. During the progress of and until the expiration of the guarantee period, he shall maintain in good and safe conditions the surface or any street over the trenches and promptly fill all depressions over and adjacent to trenches caused by settlement of backfilling.

B. Surplus or unsatisfactory excavated material shall be properly disposed of at a location off the property limits.

2.4.6 STABILIZATION

A. If portions of the bottom of trenches or excavations consist of material unstable to such a degree that, in the opinion of the Batesville Wastewater Utility inspector, it cannot adequately support the pipe of structure, the bottom shall be overexcavated and stabilized with granular material in compliance with the INDOT Standard Specifications, current edition. Depth of stabilization shall be as directed by the inspector.

2.4.7 BACKFILLING

A. Pipe bedding and initial backfill shall be clean granular material to a depth as shown on the Sanitary Sewer Construction Details of the Construction Standards. Initial backfill shall be placed in lifts of a maximum of 6 inches loose thickness. The method for placing and compacting the backfill shall comply with the INDOT Standard Specifications as applicable. At a minimum, the Contractor shall use a vibrating plate compactor with adequate passes to achieve compaction. The backfill shall be brought up evenly on both sides of pipe for the full length of pipe. Care shall be taken to ensure thorough compaction of the fill under pipe haunches.

B. Final backfill for the remainder of the trenches shall be as follows:
   1. Backfill for trenches under sidewalks, under turfed or seeded areas, and in miscellaneous areas shall be of approved earth material and contain no stones over four inches (4") in their largest dimensions. Stones which are used in backfilling shall be distributed among the earth backfill so that all interspaces are filled with fine material. All such backfilling shall be deposited in lifts of a maximum 12 inches loose thickness and compacted with a vibrating plate compactor or approved mechanical tamping devices. Excess earth to the amount required to replace settlement shall be neatly rounded over the trench and the remainder hauled off the work site. Trenches shall be maintained by the Contractor until settlement has ceased and trenches remain level with the adjacent ground.
   2. Backfill of all trenches under proposed roadways and structural footings or slabs shall be granular material. In addition, the top four (4) inches below the base of the pavement shall be backfilled with No. 53 or 73 crushed stone. The method of placing and compacting the backfill shall comply with the INDOT Standard Specifications, as applicable. At a minimum, the Contractor shall use a vibrating plate compactor with adequate passes to achieve compaction.
   3. If No. 8 stone is used as a trench backfill material, then the compaction requirement for the No. 8 stone shall be waived. If No. 8 stone is used

under proposed pavement, then a layer of geotextile fabric shall be placed on top of the No. 8 stone and before the No. 53 or 73 crushed stone is placed.

4. Flowable fill shall be used as backfill for trenches under or within five (5) feet of existing city streets as shown on the "Sanitary Sewer Construction Details" of the Construction Standards. Flowable fill shall be used as required by the City Street Superintendent or on a case by case basis. Flowable fill shall be placed up to the base of the pavement section. Allow a minimum of 24 hours of curing time for the flowable fill prior to placement of the pavement section.

C. Pipe bedding and each backfill lift shall be compacted to a dry density not less than the following percentage of maximum dry density as determined by the Modified Proctor Test (ASTM D-1557):

Usage	Compaction %
Beneath piping	95
Upper 2 feet of backfill under roadways	95
Under roadways (except upper 2 feet of backfill)	92
Under haunches and up to springline of pipe	95
From springline to 12 inches above top of pipe	90
Adjacent to (or behind) vertical walls	90
Under turfed or seeded areas below topsoil, and miscellaneous area (from 12" above pipe to surface)	85

D. No fill shall be placed against any manhole or other structure until placed concrete has been allowed to cure for at least 3 days. Backfill shall be placed in such a manner that the structure will not be damaged by shock from falling earth. The backfill material shall be deposited and compacted as specified for final backfill, and shall be placed in such a manner as to prevent eccentric loading and excessive stress on the structure. Heavy equipment for spreading and compacting shall not operate closer to foundation walls than set forth as follows.

1. Fill placed adjacent to vertical or near vertical walls (within a zone defined by imaginary lines extending horizontally away from the base of the wall for a distance of three feet and thence upward and outward on a one-to-one slope to the elevation of the top of the wall) shall be compacted to the specified density with light equipment not exceeding 1500 pounds in static weight or dynamic rated impact.

2.4.8 COMPACTION TESTING

A. Sampling and testing shall be the responsibility of the Contractor. Tests shall be performed by an approved commercial testing laboratory or may be tested with approved facilities furnished by the Contractor.

B. Laboratory tests for moisture-density relations shall be determined in accordance with ASTM D1557. A minimum of one test shall be performed on each different type of material used for backfill, or as directed by the Batesville Wastewater Utility inspector.

C. Field In-Place Density Tests:
   1. Shall be performed in sufficient numbers to ensure that the specified compaction is being obtained. A minimum of one test per lift of backfill for every 200 feet of installation shall be performed. Locations for performing the density tests will be coordinated with the Batesville Wastewater Utility inspector.
   2. Shall be determined in accordance with ASTM D1556, ASTM D2167 or ASTM D2922. When ASTM D2922 is used, the calibration curves shall be checked and adjusted using only the sand cone method as per ASTM D1556. ASTM D2922 results in a wet unit weight of soil and when using this method, ASTM D3017 shall be used to determine the moisture content of the soil. The calibration curves furnished with the moisture gages shall be checked along with density calibration checks as described in ASTM D3017. The calibration checks of both the density and moisture gages shall be made at the beginning of a job, on each different type of material encountered, and at intervals as directed by the Batesville Wastewater Utility inspector. Copies of calibration curves and results of calibration tests shall be furnished to the inspector.

D. All test results shall be submitted to the inspector.

E. Trenches improperly compacted shall be reopened to the depth directed by the inspector and then refilled and compacted to the density specified. Field in-place density tests shall also be repeated for improperly compacted trenches that are reopened, refilled, and recompacted. A minimum of one repeat test per lift of backfill for every 200 feet of improperly compacted trench that is reopened, refilled, and recompacted shall be performed.

2.4.9 INSTALLATION OF MANHOLES

A. Dewatering
   1. Shall conform to the same requirements as for sewer trench dewatering.

B. Sheet Piling
   1. Shall conform to the same requirements as for sewer trench piling.

C. Bedding for Structures
   1. Precast base sections shall be placed on a well-graded granular bedding course conforming to the requirements for sewer bedding, but not less than six (6) inches in thickness and extending to the limits of the excavation. The bedding course shall be firmly tamped and made smooth

and level to assure uniform contact and support of the precast element.

D. Cast-in-Place Bases
   1. Unless otherwise specified, cast-in-place bases shall be at least eight (8) inches in thickness and shall extend at least six (6) inches radially outside of the outside dimensions of the manhole section. The cast-in-place base shall be made of 3,000 psi concrete, 28-day compression test, and shall be reinforced as shown on the construction standards.

E. Lift Holes
   1. All lift holes in precast elements shall be thoroughly wetted and then be completely filled with non-shrinking concrete grout, smoothed and painted both inside and out, to ensure water tightness.

F. Placing Precast Sections
   1. Precast sections shall be placed and aligned to provide vertical sides and vertical alignment of the ladder rungs. The completed manhole shall be rigid, true to dimensions, and be watertight.

G. Placing of Castings
   1. Castings placed on concrete surface shall be set in full grout beds. The grout shall be mixed in proportion of one (1) part Portland Cement to three (3) parts sand, by volume, based on dry materials. Castings shall be set accurately to the finished elevation so that no subsequent adjustment will be necessary, or unless otherwise specified by the Batesville Wastewater Utility inspector.
   2. After grout has cured, use an approved bitumastic material around the outside of casting to ensure water tightness.
   3. Where work is in paved streets or areas which have been brought to grade, adjusting rings shall be used within a range of a minimum of 4” and a maximum of 12” between the top of the cone or slab and the underside of the manhole casting for adjustment of the casting to street grade.
   4. Where work is in the unimproved street or alley, adjusting rings shall be used within a range of a minimum of 4” and a maximum of 12 between the top of the cone or slab and the underside of the manhole casting for adjustment of the casting to finished grade. The top of the manhole casting shall be flush with the finished grade, unless otherwise directed by the Batesville Wastewater Utility inspector.
   5. Where work is in cultivated areas, the top of the manhole casting shall be buried three (3) feet, and in non-cultivated areas, the casting shall be flush with the finished grade, unless otherwise directed by the Batesville Wastewater Utility inspector.
   6. When adjusting rings are used to set the castings to grade, they shall be pointed up and a grout bed placed between each ring and casting; and made watertight with a heavy coating of an approved bitumastic material on the outside of structure.

H. Channels and Inverts
   1. Channels and inverts shall be made to conform accurately to the sewer characteristics and grades, and shall be brought together smoothly with well-rounded junctions, satisfactory to the Batesville Wastewater Utility inspector and in conformance with the construction standards, unless otherwise directed.

I. Pipe Connections
   1. Special care shall be taken to see that the opening through which pipes enter the structure have all pipe ends sawed and smoothed completely. Pipes are to be firmly full of jointing material at entrance to manhole to ensure watertightness. The pipes shall not protrude farther than three (3) inches into the inside face of the manhole, measured along the horizontal center of the pipe.
   2. In case of smooth sidewall pipe, rubber water stops, "O"-Ring gaskets, or poured-in-place pipe sleeves shall be used for watertight joints between the pipe and manhole.
   3. When new holes are required in the manhole, they shall be core drilled or star drilled in a circle of the required diameter and then knocked out. In no instance shall new holes be sledge-hammered out.
   4. Pipe connections shall be provided with a watertight seal in accordance with ASTM C923 - Standard Specification for Resilient Connectors Between Reinforced Concrete Manhole Structures, Pipes and Laterals.

J. Sanitary Sewer Drop Manhole Connections
   1. An exterior drop pipe should be provided for a sewer entering a manhole at an elevation of greater than twenty-four (24) inches or more above the manhole downstream invert. The minimum diameter of a drop manhole shall be forty-eight (48) inches. The diameter of the drop pipe shall be a minimum of eight (8) inches for 8-inch to 12-inch diameter pipe, and a maximum of twelve (12) inches in diameter for all pipes larger than 12-inch, unless otherwise specified by Batesville Wastewater Utility.

2.4.10 GRADE ADJUSTMENT OF EXISTING STRUCTURES

A. Both adjusting castings to grade and reconstruction of structures shall conform with the applicable provisions of the Indiana Department of Transportation Standard Specifications, current edition, as approved by Batesville Wastewater Utility.

2.4.11 TESTS FOR GRAVITY SANITARY SEWERS

A. Visual Test - At the discretion of the Engineer, a visual test may be performed by lamping the sewer to check alignment and grade. All obstructions shall be removed. Any sewer showing less than a full circle of

light when a lamp is viewed between adjacent manholes shall be considered unsatisfactory and shall be repaired by the Contractor without additional compensation.

B. Air Test - Leakage testing by means of low-pressure air shall be required in accordance with the procedures described in ASTM F1417 per 327 IAC 3-6-19. The air leak rate shall not exceed 0.0015 cfm/square foot at 4 psig. Refer to the following table

SPECIFICATION TIME REQUIRED FOR A 0.5 PSIG
PRESSURE DROP
FOR SIZE AN LENGTH OF PIPE INDICATED

1 Pipe Diameter (in)	2 Mininum Time (min: sec)	3 Length for Minimum Time (ft)	4 Time for Longer Length (sec)	Specified Minimum for Length (L) Shown (min:sec)					
				100 ft	150 ft	200 ft	250 ft	300 ft	350 ft
4	1:53	597	.190 L	1:53	1:53	1:53	1:53	1:53	1:53
6	2:50	398	.427 L	2:50	2:50	2:50	2:50	2:50	2:50
8	3:47	298	.760 L	3:47	3:47	3:47	3:47	3:48	4:26
10	4:43	239	1.187 L	4:43	4:43	4:43	4:57	5:56	6:55
12	5:40	199	1.709 L	5:40	5:40	5:42	7:08	8:33	9:58
15	7:05	159	2.671 L	7:05	7:05	8:54	11:08	13:21	15:35
18	8:30	133	3.846 L	8:30	9:37	12:49	16:01	19:14	22:26
21	9:55	114	5.235 L	9:55	13:05	17:27	21:49	26:11	30:32
24	11:20	99	6.837 L	11:24	17:57	22:48	28:30	34:11	39:53
27	12:45	88	8.653 L	14:25	21:38	28:51	36:04	43:16	50:30

C. Deflection Test - An in place deflection test will be performed on all PVC sewer pipe. All pipes shall be tested prior to substantial completion but not any earlier than 30-days after installation to allow for settlement. An allowable deflection of 5% internal pipe diameter will be acceptable. A nine-point “go, No Go” mandrel shall be used for the deflection test and a proving ring shall be provided for each size mandrel. All pipes exceeding the allowable deflection shall be replaced at no additional cost to the Owner. The Contractor will bear all costs for testing and testing equipment. A portion of the unit price for gravity sewers will be withheld until a successful deflection test has been completed.

D. Sewer Camera Inspection
1. All sewer line shall be inspected using a pipeline sewer camera prior to

acceptance. A ½" VHS videotape or DVD shall be supplied to the Batesville Wastewater Utility Inspector with an audio log by station between structures. The recording shall show rise/slope of sewer. Any portions of the sewer line that do not have sufficient slope to prevent solids collection in the line shall be excavated and replaced.

2.4.12 TESTS FOR FORCE MAINS AND PRESSURE SEWERS

A. Test procedures shall meet the requirements of AWWA Standard C600.

B. The piping shall be complete, and thrust blocks shall have been in place for not less than 10 days prior to being tested.

C. Test closed-end pressure piping as follows:
   1. Expel all air from the piping prior to the application of test pressure. Tap the piping at high points, if necessary, to release all air from the piping. Plug taps after the test is successfully completed. Plugs shall be watertight.

   2. Test piping at a static pressure of 150 pounds per square inch over a period of not less than eight consecutive hours. The test will be considered successful when the pressure drop over the test period is two pounds per square inch or less. If the pressure drop exceeds two pounds per square inch, repair the leaks and repeat the test. Repair leaks and repeat the test until the pressure drop over the test period is two pounds per square inch or less.

D. Test open-end pressure piping as follows:
   1. The ends of piping being tested shall have test plugs or caps adapted with a tap of adequate diameter to fill and pressurize the system with water.
   2. When a section is terminated at a manhole with a plain end (spigot), the pipe must extend into the manhole of sufficient length to accommodate a restraining cap.
   3. Water shall be introduced into the section to be tested at the lower end. The upper end shall have an orifice at the top of the plug or cap to expel air when filling the system with water. All air shall be expelled from the pipe.
   4. The test plugs or caps shall be capable of withstanding an internal pressure of 175 psi.
   5. Gravity flow systems shall be tested in conformance with Section 13 of AWWA Specifications 600, at 50 pounds per square inch over a period of not less than one hour. The system will not be acceptable until all leaks have been repaired.
   6. Pumped flow systems shall be subjected to an internal pressure equal to

twice the operating head pressure divided by 2.31; and maintain this pressure over a period of not less than two hours. In no case shall the pressure be less than 50 psig.

7. Hydrostatic test may be dangerous if, because of ignorance or carelessness, a line is improperly prepared. It is extremely important that the various plugs be installed in such a way as to prevent blowouts. Inasmuch as a force of 2500 pounds is exerted on an 8-inch plug by an internal pipe pressure of 50 psi, it should be realized that sudden expulsion of a poorly installed plug or cap can be dangerous. As a safety precaution, no one shall be allowed in or around the manholes when the pipe is pressurized.

2.4.13 MANHOLE TESTING

A. Vacuum Testing – All manholes shall be tested by the Negative Air Pressure (Vacuum) Test in accordance with ASTM 1244.

B. Preparation and Summary of Practice – All lift holes shall be plugged. All pipes entering the manhole shall be temporarily plugged, taking care to securely brace the pipes and plugs to prevent them from being drawn into the manhole. Caution as to the type of pipe/manhole wall seals used should be investigated to determine their reaction to vacuum testing. A vacuum will be drawn and the vacuum drop over a specified period is used to determine the acceptability of the manhole.

C. Procedure
   1. The test head shall be placed at the top of the manhole in accordance with the manufacture's recommendations.
   2. A vacuum of 10 in. of mercury shall be drawn on the manhole, the valve on the vacuum line of the test head closed, and the vacuum pump shut off. The time shall be measured for the vacuum to drop 9 in. of mercury.
   3. The manhole shall pass if the time for the vacuum reading to drop from 10 in. of mercury to 9 in. of mercury meets or exceeds the values indicated in the following table:

Minimum Test Times for Various Manhole Diameters									
Depth (ft)	Manhole Diameter (inches)								
	30	33	36	42	48	54	60	66	72
	Time (seconds)								
8	11	12	14	17	20	23	26	29	33
10	14	15	18	21	25	29	33	36	41
12	17	18	21	25	30	35	38	43	49
14	20	21	26	30	35	41	46	51	57
16	22	24	30	34	40	46	52	58	67
18	25	27	32	38	45	52	59	65	73
20	26	30	35	42	50	53	65	72	81

22	31	33	39	46	55	64	72	79	89
24	33	36	42	51	59	64	78	87	97
26	36	39	46	55	64	75	85	94	105
28	39	42	49	59	69	81	91	101	113
30	42	45	53	63	74	87	98	108	121

4. If the manhole fails the initial test, necessary repairs shall be made by an approved method. The manhole shall then be retested until a satisfactory test is obtained.

2.4.14 RESTRAINING (FOR FORCE MAINS AND PRESSURE SEWERS)

A. General:
   1. Provide restraint of joints, fittings, bends, and valves below grade. Restraint options are as follows:
      a. Stainless steel Star tie bolt restraining systems
      b. MJ restraining gland for D.I. pipe manufactured by EBAA Iron, Series 1200; Romac Industries, Style MJR6; or approved equal.
      c. Restrainers for PVC pipe manufactured by Uni-Flange, Series 900, 1300, 1350, 1390, Mega-Lug, or approved equal.
      d. Provide concrete thrust blocking with a compressive strength of 2500 psi in 28 days only at locations approved by the Batesville Wastewater Utility inspector.

B. Installation of Thrust Blocking:
   1. Locate thrust blocking between solid ground and the fitting to be anchored.
   2. Unless otherwise shown or directed by the Batesville Wastewater Utility inspector, place the base and thrust bearing sides of thrust blocking directly against undisturbed earth.
   3. Sides of thrust blocking not subject to thrust may be placed against forms.
   4. Place thrust blocking so the fitting joints will be accessible for repair.
   5. Protect steel rods and clamps by galvanizing or by coating with bituminous paint.

2.4.15 INSTALLATION OF PUMPS IN LIFT STATIONS

A. Pumps shall be installed in accordance with shop drawings furnished by the manufacturer and approved by Batesville Wastewater Utility and in accordance with the construction drawings.

2.4.16 RECORD DRAWINGS

A. No sewer system shall be accepted by the City of Batesville unless the installer provides at least two sets of “As Built” drawings. The “As Built” drawings shall show the actual location of the sewer, the actual sewer elevations (referenced in MSL), and lengths, lateral locations and depths, and final casting grades. All lateral measurements shall be referenced to permanent landmarks. The results of sewer, force main, lift station, and manhole testing shall also be submitted. “As-Built” drawings and test results shall be certified by a registered engineer and shall also be submitted to the Indiana Department of Environmental Management. A registered engineer shall certify “As-Built” drawings and shall be provided in a hard copy format and a digital format in either AutoCAD or Adobe.

END OF SECTION

FORM SS-A

City of Batesville
Sewer Project Inspection Checklist

1. Proper invert elevations

2. Proper pipe grades

3. Proper pipe bedding

4. Backfill materials
   - Flowable Fill
   - #53's/#73's
   - #8's
   - Spoil

5. Proper construction materials
   - Pipe
   - Manholes
   - Manhole castings
   - Cleanouts
   - Fittings
   - Service taps

6. Testing completed and passed
   - Mandrel
   - Air
   - Vacuum(manholes)

7. Proper site restoration
   - Asphalt
   - Stone pavement
   - Seeding
   - Other

FORM SS-B

CITY OF BATESVILLE
PRESSURE LEAKAGE TEST – FORCE MAINS OR PRESSURE SEWERS

PROJECT NAME: _____ JOB NO.: _____ DATE: _____

CONTRACTOR: _____ SUPERINTENDENT: _____

TEST PERFORMED BY: _____ COMPANY: _____

TEST OBSERVED BY: _____ COMPANY: _____

CITY REPRESENTATIVE SIGNATURE: _____

TEST DATA

PIPE SIZE: _____ LOCATION: STATION _____ TO _____ L.F. _____

_____ LOCATION: STATION _____ TO _____ L.F. _____

PIPE MATERIAL: _____ DRAWINGS PAGE NO.: _____ COMMENTS: _____

START TIME: _____ PRESSURE: _____PSI _____

FIRST HOUR: _____ PRESSURE: _____PSI _____

END TIME: _____-_ PRESSURE: _____PSI _____

GALLONS USED: _____ *ALLOWABLE LEAKAGE: _____ _____

TEST PASS OR FAIL: _____ _____

NOTE: TEST MUST BE RUN FOR A MINUMUM OF TWO HOURS AT THE SPECIFICATION REQUIREMENTS.

LENGTH OF PIPE (L.F.) = S NOMINAL PIPE DIA. (INCHES) = D

SQUARE ROOT OF TEST PRESSURE (PSI) = P *ALLOWABLE LEAKAGE = L

Formula (for known pipe length):

$$L = \frac{S \times D \times P}{133{,}200}$$

Example:

$$L = \frac{1000' \times 8'' \ 50 \text{ psi}}{133{,}200} = L = 0.42 \text{ gph}$$

Calculation:

$$L = \frac{___ \times ___ \times ___ \text{ psi}}{133{,}200} = L = _____ \text{ gph}$$

NOTE: Above formula is based on mechanical or push-on joints with 18-foot pipe lengths. For a pipe 20 feet long, multiply L by 0.9 for allowable leakage.

OR

N = Number of pipe joints

Formula (for known # of pipe joints):

$$L = \frac{N \times D \times P}{7{,}400}$$

Example:

$$L = \frac{56 \times 8 \ 50 \text{ psi}}{7{,}400} = L = 0.42 \text{ gph}$$

Calculation:

$$L = \frac{X \times ___ \text{ psi}}{7{,}400} = L = _____ \text{ gph}$$

FORM SS-C

CITY OF BATESVILLE
EXFILTRATION WATER TEST FOR GRAVITY SEWERS

PROJECT NAME: _____ JOB NO.: _____ DATE: _____

CONTRACTOR: _____ SUPERINTENDENT: _____

TEST PERFORMED BY: _____ COMPANY: _____

TEST OBSERVED BY: _____ COMPANY: _____

CITY REPRESENTAIVE SIGNATURE: _____

TEST DATA

PIPE SIZE: _____ PIPE MATERIAL: _____	STARTING TIME: _____
PIPE LOCATION: MH# _____TO MH# _____	DATE: _____
DRAWINGS PAGE NO.: _____	ENDING TIME: _____
TEST PASS OR FAIL: _____	DATE: _____
COMMENTS: _____	*ALLOWABLE LEAKAGE: _____
_____	ACTUAL LEAKAGE: _____

* Formula for Calculating Allowable Leakage:
200 gpd/mile of pipe/inch diameter of pipe

EXAMPLE: Allowable leakage for 400 feet of 8-inch sewer

$$200 \text{ gpd} \times \frac{400' \times 8''}{5{,}280'} = 121.2 \text{ gpd}$$

CALCULATION: 200 gpd x $\frac{_____}{5{,}280'}$ x _____ = _____gpd

FORM SS-D

CITY OF BATESVILLE
INFILTRATION-INFLOW TEST FOR GRAVITY SEWERS

PROJECT NAME: _____ JOB NO.: _____ DATE: _____

CONTRACTOR: _____ SUPERINTENDENT: _____

TEST PERFORMED BY: _____ COMPANY: _____

TEST OBSERVED BY: _____ COMPANY: _____

CITY REPRESENTATIVE SIGNATURE: _____

TEST DATA

PIPE SIZE: _____ PIPE MATERIAL: _____ DRAWINGS PAGE NO.: _____

PIPE LOCATION: MH# _____TO MH# _____ LENGTH: _____

WEIR INST. DATE/TIME: _____ WEIR READING: _____ DATE/TIME: _____

ACTUAL LEAKAGE: _____GDP/MILE/INCH DIA. TEST PASS OR FAIL: _____

*ALLOWABLE LEAKAGE: _____GDP/MILE/INCH DIA.

COMMENTS: _____
_____
_____
_____

*FORMULA FOR CALCULATING ALLOWABLE LEAKAGE:

200 Gallons per day x mile of pipe x inch of diameter of pipe

EXAMPLE: Allowable leakage for 1,000 feet of 8-inch sewer main over a 24-hour period:

$$200 \text{ gpd} \times \frac{1{,}000'}{5{,}280'} \times 8'' = 303 \text{ gpd}^{**}$$

CALCULATION: 200 gpd x _____ x _____ = _____gpd

**This corresponds with direct reading from weir for a 24-hour period.

FORM SS-E

CITY OF BATESVILLE
EXFILTRATION AIR TEST FOR GRAVITY SEWERS
(Low Pressure Air Test)

PROJECT NAME: _____ JOB NO.: _____ DATE: _____

CONTRACTOR: _____ SUPERINTENDENT: _____

TEST PERFORMED BY: _____ COMPANY: _____

TEST OBSERVED BY: _____ COMPANY: _____

CITY REPRESENTATIVE SIGNATURE: _____

TEST DATA

PIPE SIZE: _____ PIPE MATERIAL: _____	**MIN. AIR HOLDING TIME: _____ MINUTES
PIPE LOCATION: MH# _____ TO MH# _____	*STARTING TIME:_____
DRAWINGS PAGE NO.: _____	ENDING TIME: _____
TEST PASS OR FAIL: _____	*STARTING PRESSURE: _____PSI
COMMENTS: _____	*ENDING PRESSURE: _____PSI
_____	PRESSURE LEAKAGE: _____PSI

NOTE: RECORD ANY INTERMITTENT GAUGE PRESSURE READINGS AND RECORD THE TIME IN "COMMENTS" SECTION ABOVE.

* After 5-minute stabilization period.

** Formula for Calculating Allowable Leakage Time:

Minimum air pressure holding time in seconds equals the pipe diameter in inches multiplied by 75.

EXAMPLE: Minimum air holding time for 8-inch sewer
8 x 75 = 600 seconds = 10 minutes

CALCULATION: _____ x 75 = _____seconds = _____minutes

The following is from the Development and Construction Standards Manual, Chapter 2; "Sanitary Specifications"

All tests for exfiltration shall be performed by the Contractor or his representative; and shall be observed by the Owner and by the Engineer or his representative. Necessary compressors, plugs, valves, equipment, and labor shall be furnished by the Contractor. The sewer line shall be safely sealed at each end between consecutive manholes by the Contractor. The seal at one end shall have an orifice through which to pass air into the pipe. An air supply shall be connected to the orifice, with appropriate shut-off valve and pressure gauge, reading between 0 and 5 psi (no other size pressure gauges are acceptable). The pipeline shall be pressurized to a pressure of 3.5 to 4.0 psi and stabilized for five (5) minutes. If necessary, air shall be added to the line during the five minute stabilization period to maintain a minimum pressure at 3.5 psi. The valve(s) shall then be closed and timing started; when the pressure drops to 2.5 psi, the test is over and the time is recorded. The lapsed leakage time is then checked against the formula for calculated allowable leakage time, and the test passes if the lapsed leakage time is less than the calculated allowable leakage time. The test also passes if the stabilized pressure does not drop to 2.5 psi during the calculated allowable leakage time.

FORM SS-F

CITY OF BATESVILLE

PRECAST MANHOLE VACUUM TEST									Project No.
			MANHOLE		TIME (SEC)				
NO.	DATE	MH NO.	DIAMETER	DEPTH		PASS	FAIL	INSPECTOR	COMMENTS
1									
2									
3									
4									
5									
6									
7									
8									
9									
10									
11									
12									
13									
14									
15									
16									
17									
18									
19									
20									

FORM SS-G

CITY OF BATESVILLE

MANDREL TEST							Project No.
NO.	DATE	TO/FROM	SIZE	PASS	FAIL	INSPECTOR	REMARKS
1							
2							
3							
4							
5							
6							
7							
8							
9							
10							
11							
12							
13							
14							
15							
16							
17							
18							
19							
20							

FORM SS-H

CITY OF BATESVILLE

AIR TEST										Project No.
		MANHOLE	PSI		TIME					
NO.	DATE		START	END	START	END	PASS	FAIL	INSPECTOR	REMARKS
1										
2										
3										
4										
5										
6										
7										
8										
9										
10										
11										
12										
13										
14										
15										
16										
17										
18										
19										
20										

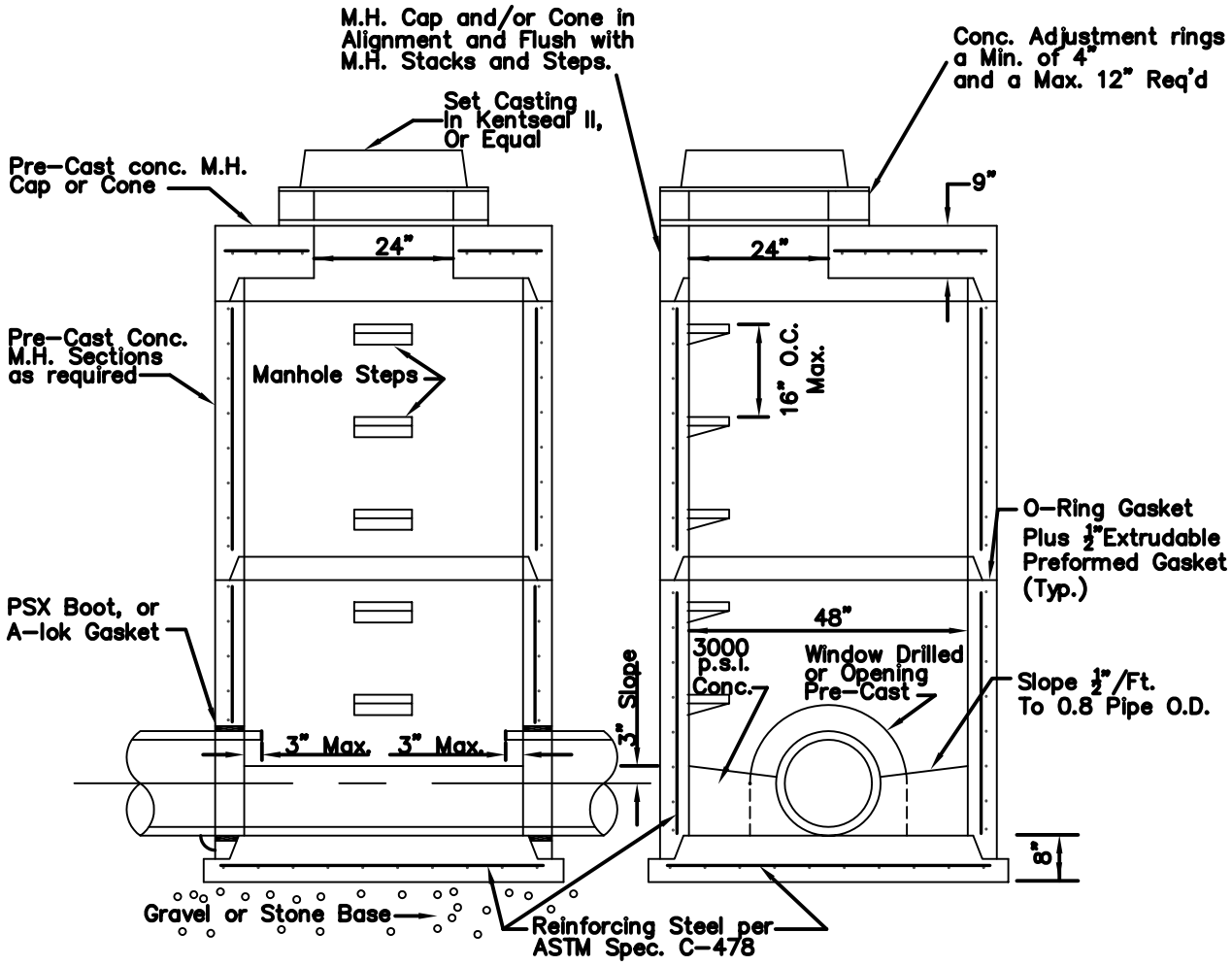

GENERAL CONSTRUCTION REQUIREMENTS

1) Manhole made in accordance with ASTM C-478.
2) All pipes shall have a smooth finish.
3) Manhole joints tongue and groove with butyl rope and o'ring in accordance with ASTM C-443.
4) The base shall be placed on 6" minimum compacted gravel or stone.
5) Base Diameter 48"

BATESVILLE WASTEWATER UTILITY

SANITARY SEWER CONSTRUCTION DETAILS

TYPE I MANHOLE

SCALE: NONE	DATE: AUG. 2004	DWG. NO. SS-1

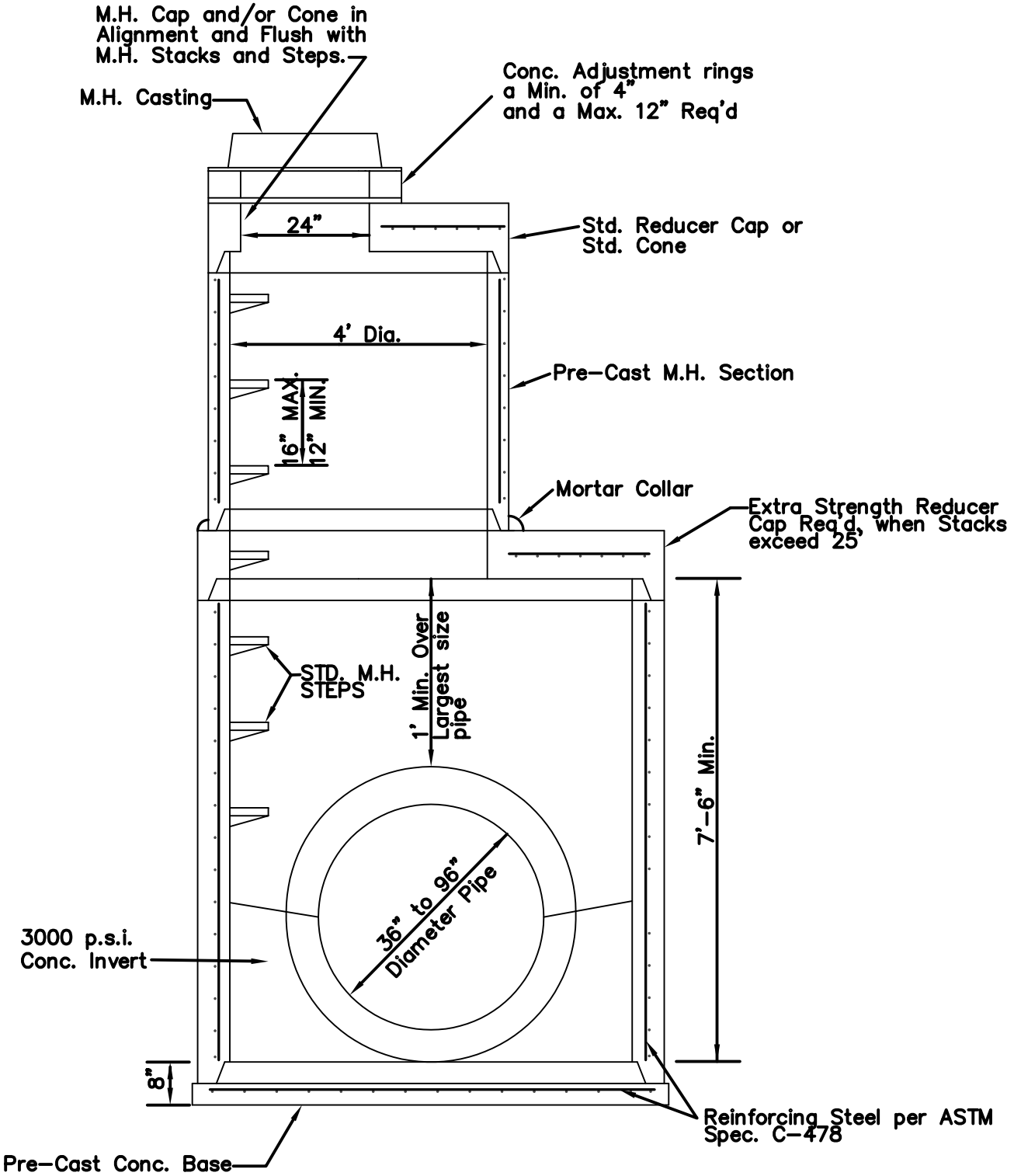

NOTE: General Construction Requirements Same as TYPE I Manhole

BATESVILLE WASTEWATER UTILITY

SANITARY SEWER CONSTRUCTION DETAILS

TYPE II MANHOLE
(FOR 36" - 96" DIAMETER PIPES)

SCALE: NONE	DATE: AUG. 2004	DWG. NO. SS-2

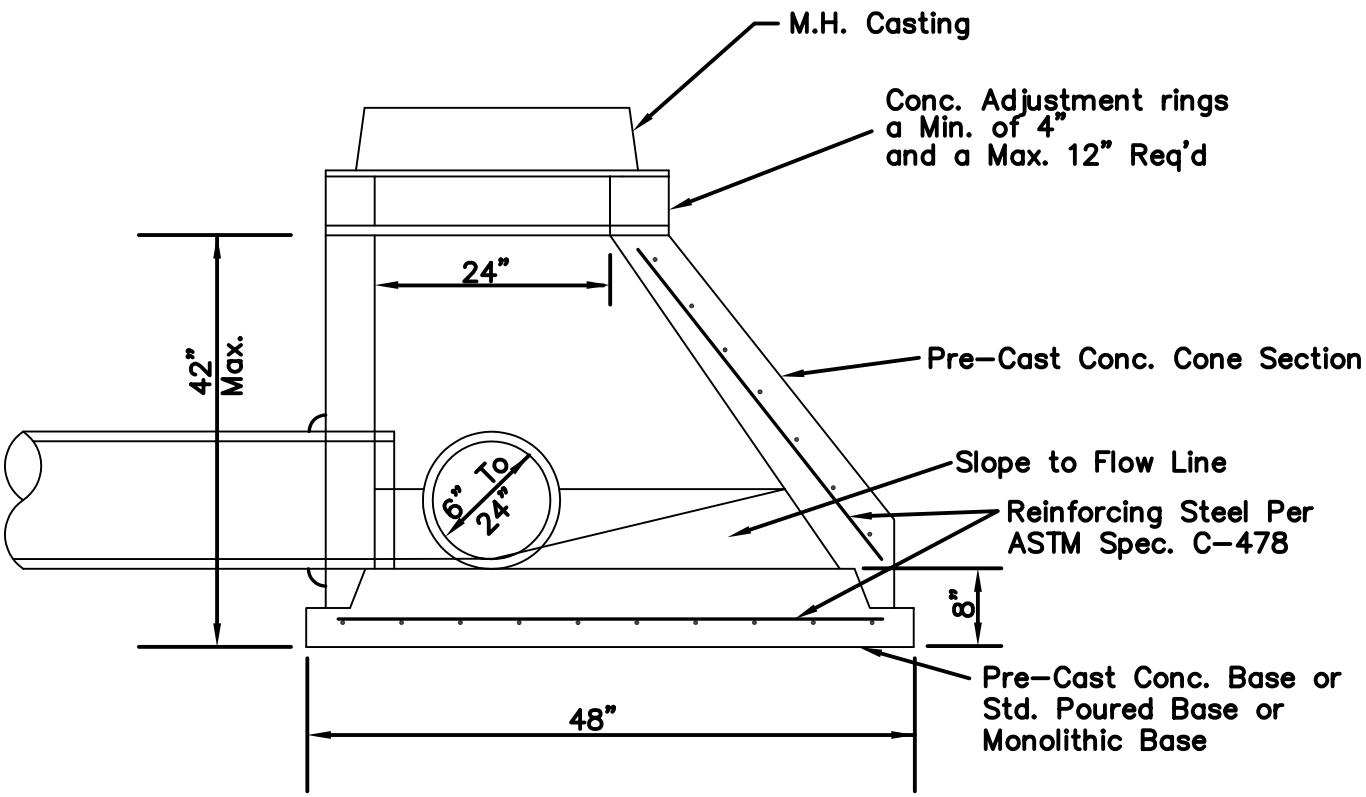

NOTE: General Construction Requirements
Same as TYPE I Manhole

BATESVILLE WASTEWATER UTILITY

SANITARY SEWER CONSTRUCTION DETAILS

TYPE IV MANHOLE
(SHALLOW CONNECTION)

SCALE: NONE	DATE: AUG. 2004	DWG. NO. SS-3

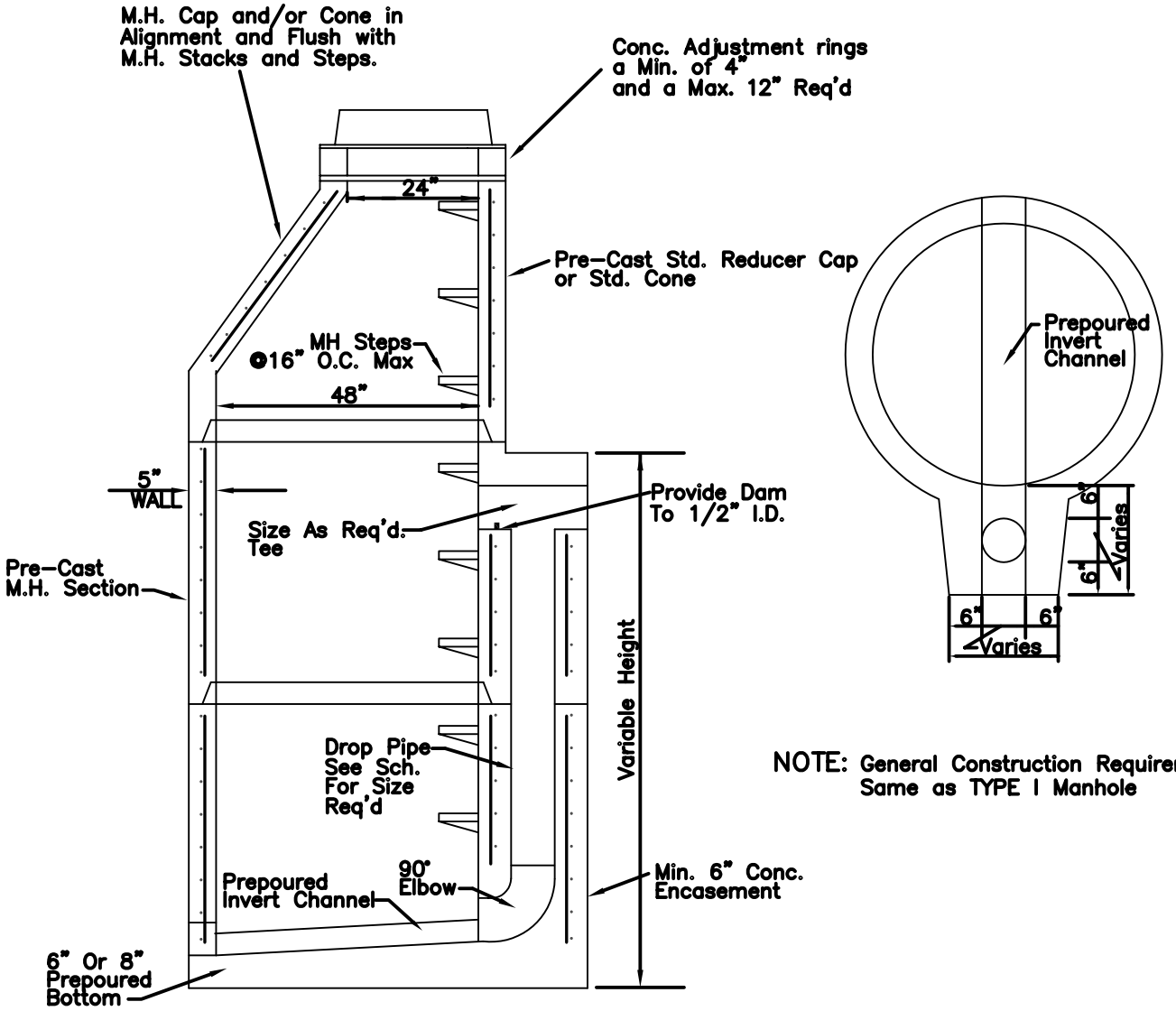

NOTE: General Construction Requirements Same as TYPE I Manhole

BATESVILLE WASTEWATER UTILITY

SANITARY SEWER CONSTRUCTION DETAILS

TYPE V MANHOLE
(DROP MANHOLE)

SCALE: NONE	DATE: AUG. 2004	DWG. NO. SS-4

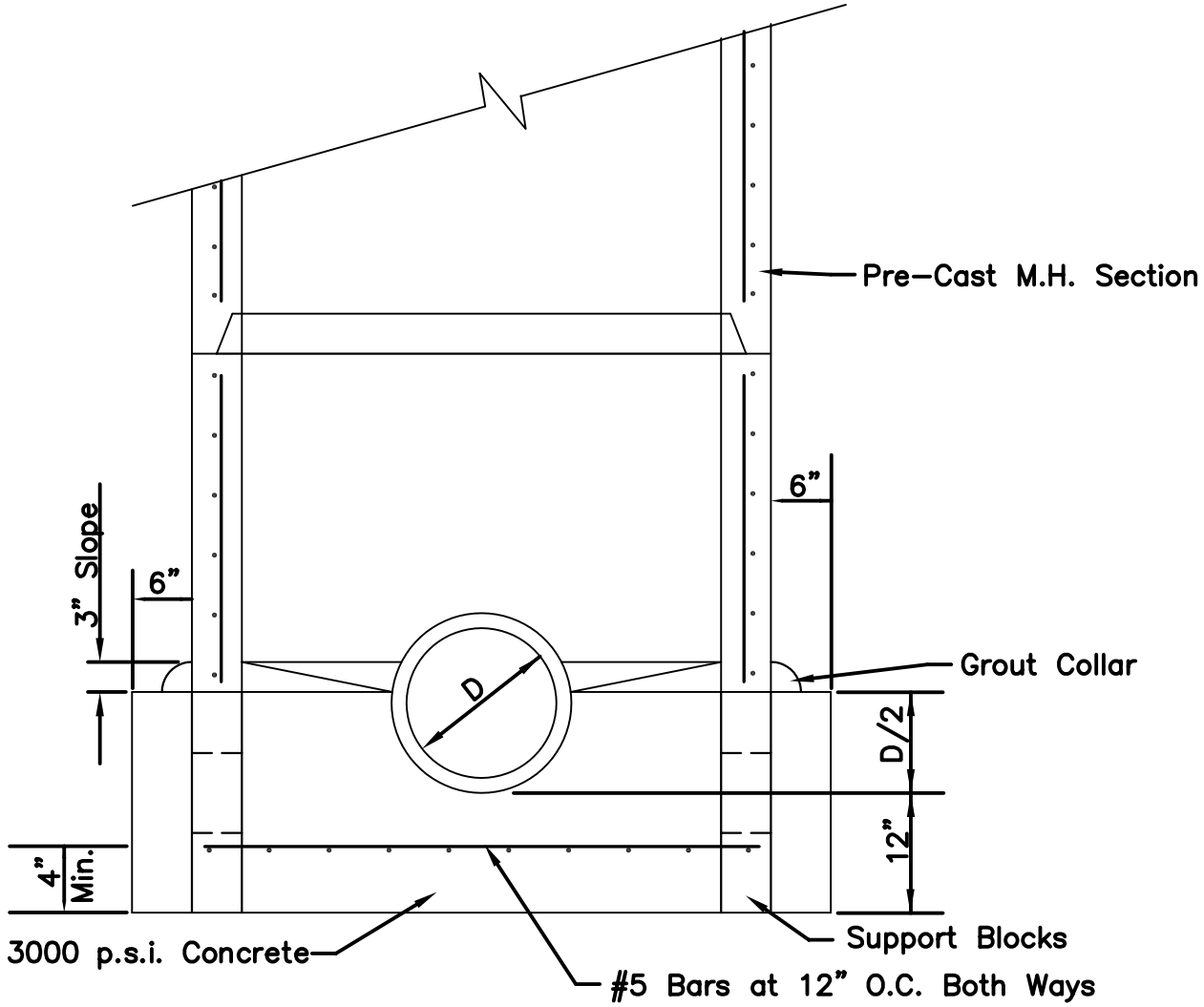

NOTE: General Construction Requirements Same as Standard Manhole.

BATESVILLE WASTEWATER UTILITY

SANITARY SEWER CONSTRUCTION DETAILS		
INVERT FOR CAST IN PLACE PIPE AND BASE		
SCALE: NONE	DATE: AUG. 2004	DWG. NO. SS-5

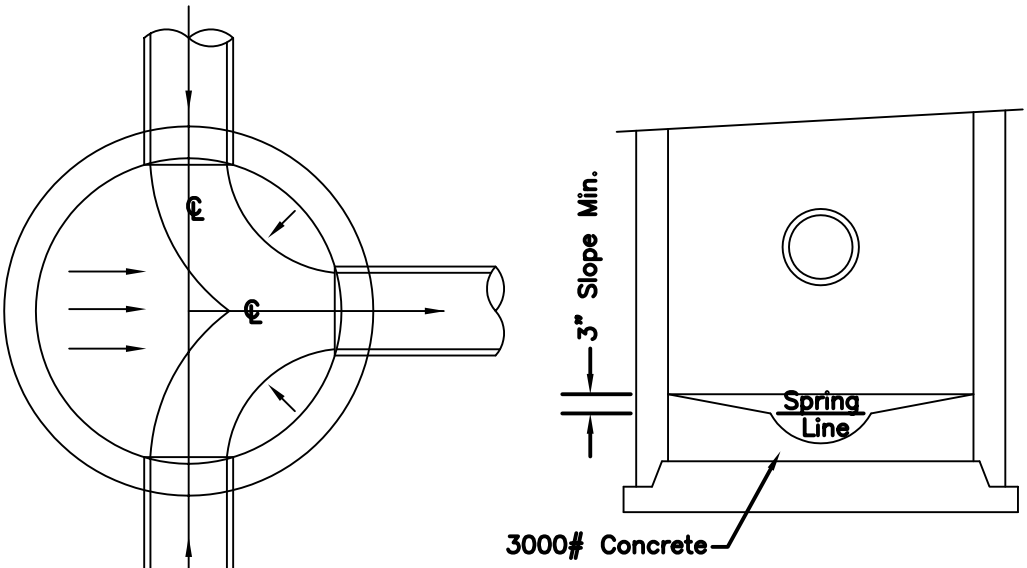

DROP, END, OR STEP–UP MANHOLE

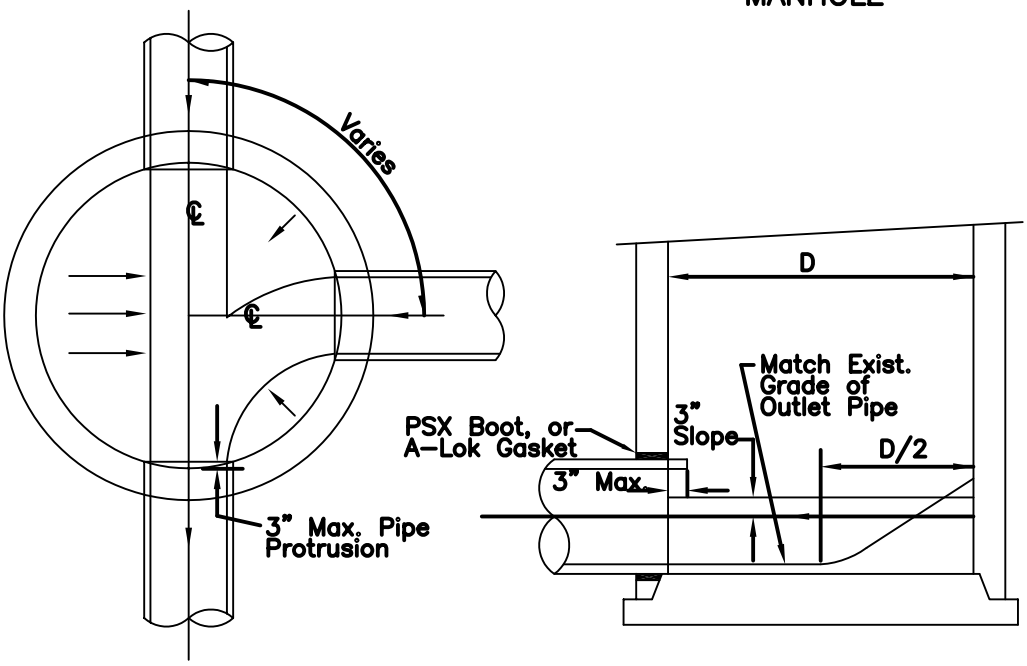

NOTE:

1.) ℄ of all pipe to intersect ℄ of M.H.
2.) All incoming pipe shall have a Smooth Finish.
3.) Inverts to be cast under dry pipe conditions.

BATESVILLE WASTEWATER UTILITY

SANITARY SEWER CONSTRUCTION DETAILS		
INVERT SHAPES		
SCALE: NONE	DATE: AUG. 2004	DWG. NO. SS-6

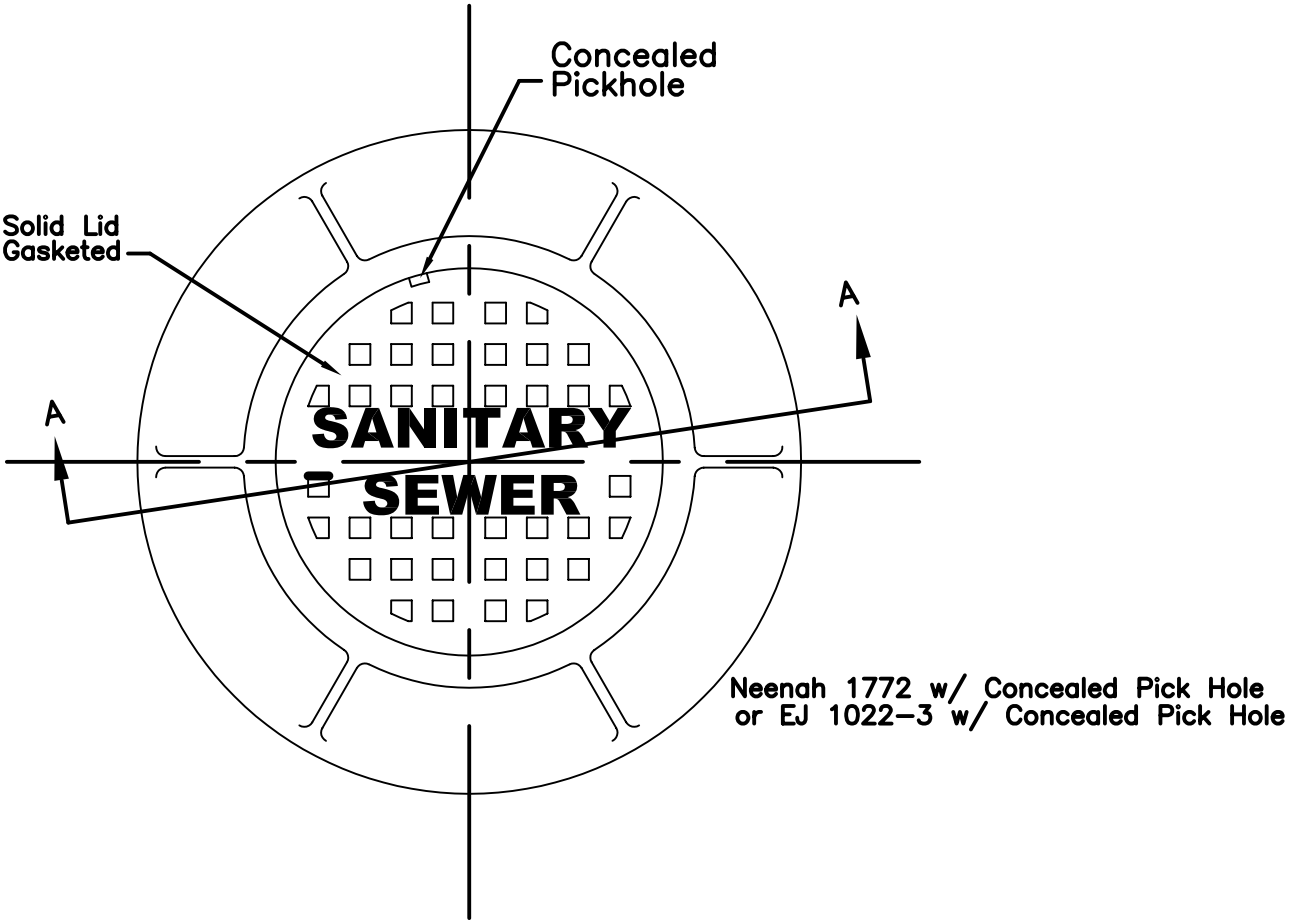

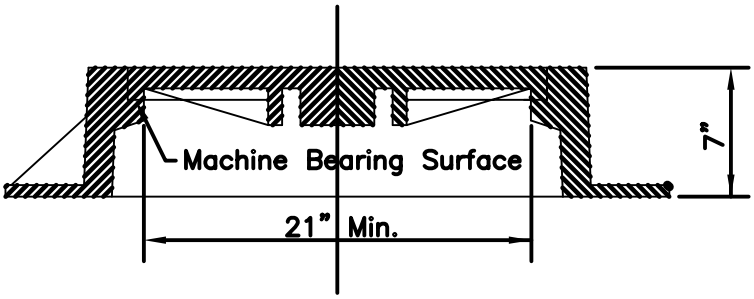

SECTION A-A

BATESVILLE WASTEWATER UTILITY

SANITARY SEWER CONSTRUCTION DETAILS		
TYPE "A" MANHOLE CASTING DETAIL		
SCALE: NONE	DATE: AUG. 2004	DWG. NO. SS-7

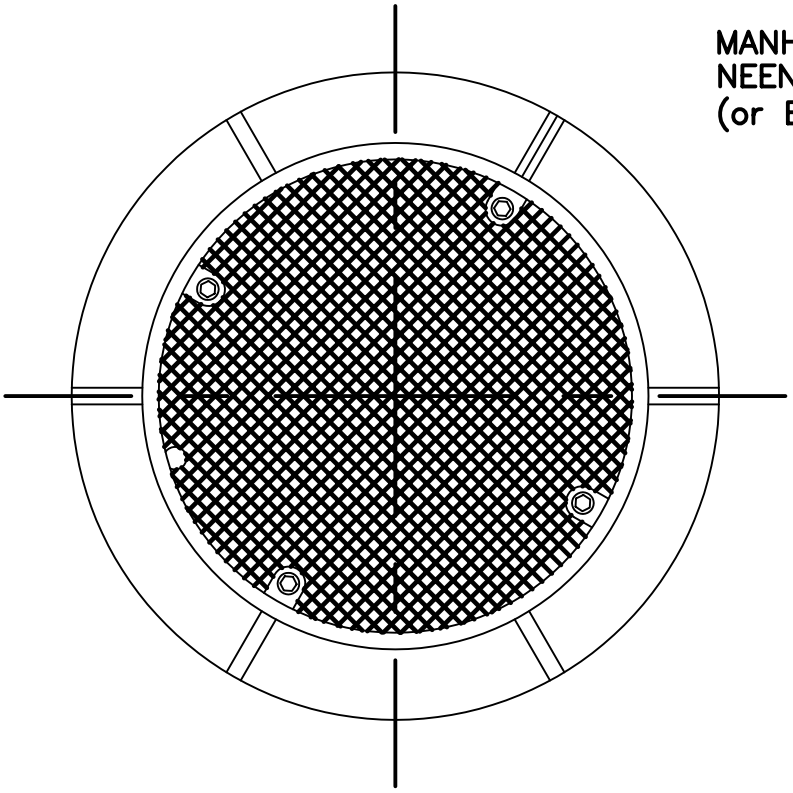

MANHOLE CASTING
NEENAH R-1916-F
(or Equal)

Note: For Use When MH's Are Located Adjacent To Streams, Creeks, And Areas Prone To Flooding

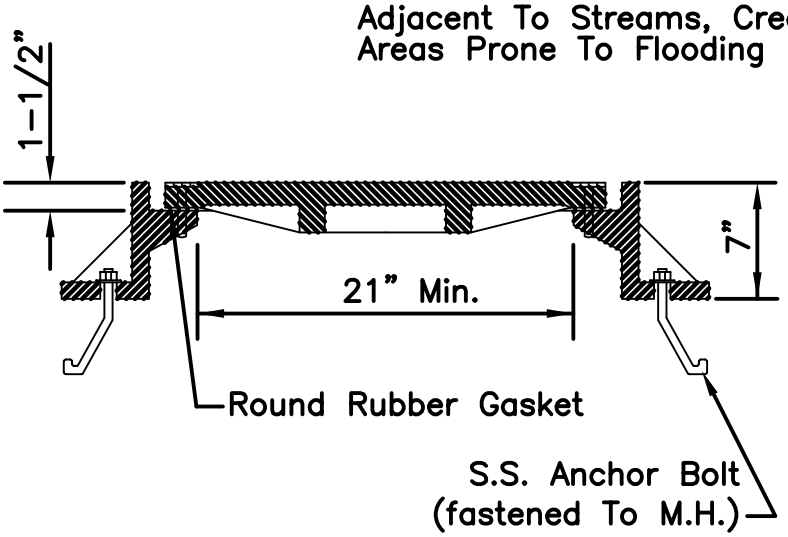

BATESVILLE WASTEWATER UTILITY

SANITARY SEWER CONSTRUCTION DETAILS

TYPE "J" WATERPROOF MANHOLE
FRAME WITH BOLTED LID AND GASKET

SCALE: NONE	DATE: AUG. 2004	DWG. NO. SS-8

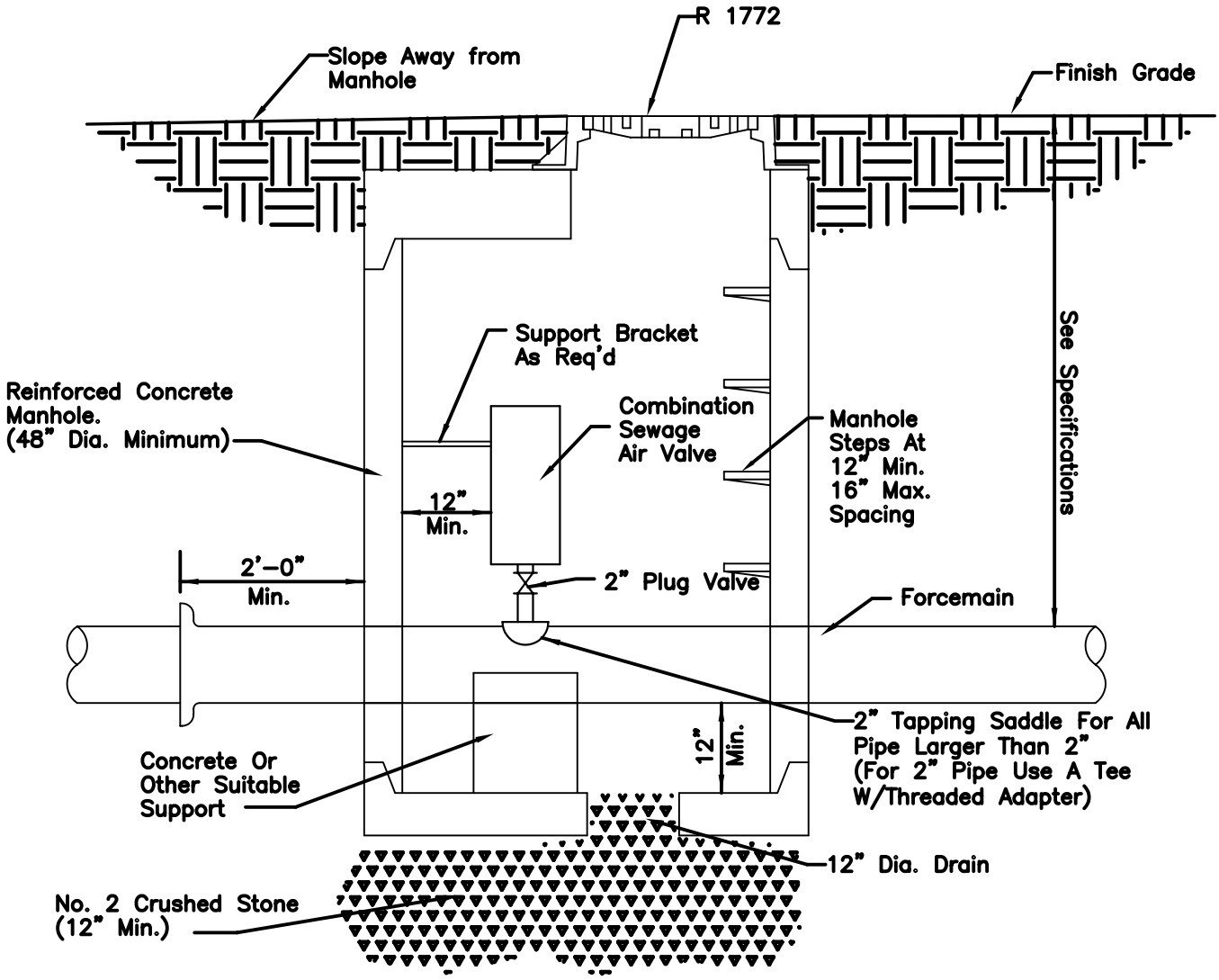

NOTE:

All Air Valve Structures Shall Be Field Located On Each High Point Elevation On The Forcemain Or As Located On The Drawings.

BATESVILLE WASTEWATER UTILITY

SANITARY SEWER CONSTRUCTION DETAILS

COMBINATION SEWAGE AIR VALVE STRUCTURE

SCALE: NONE	DATE: AUG. 2004	DWG. NO. SS-9

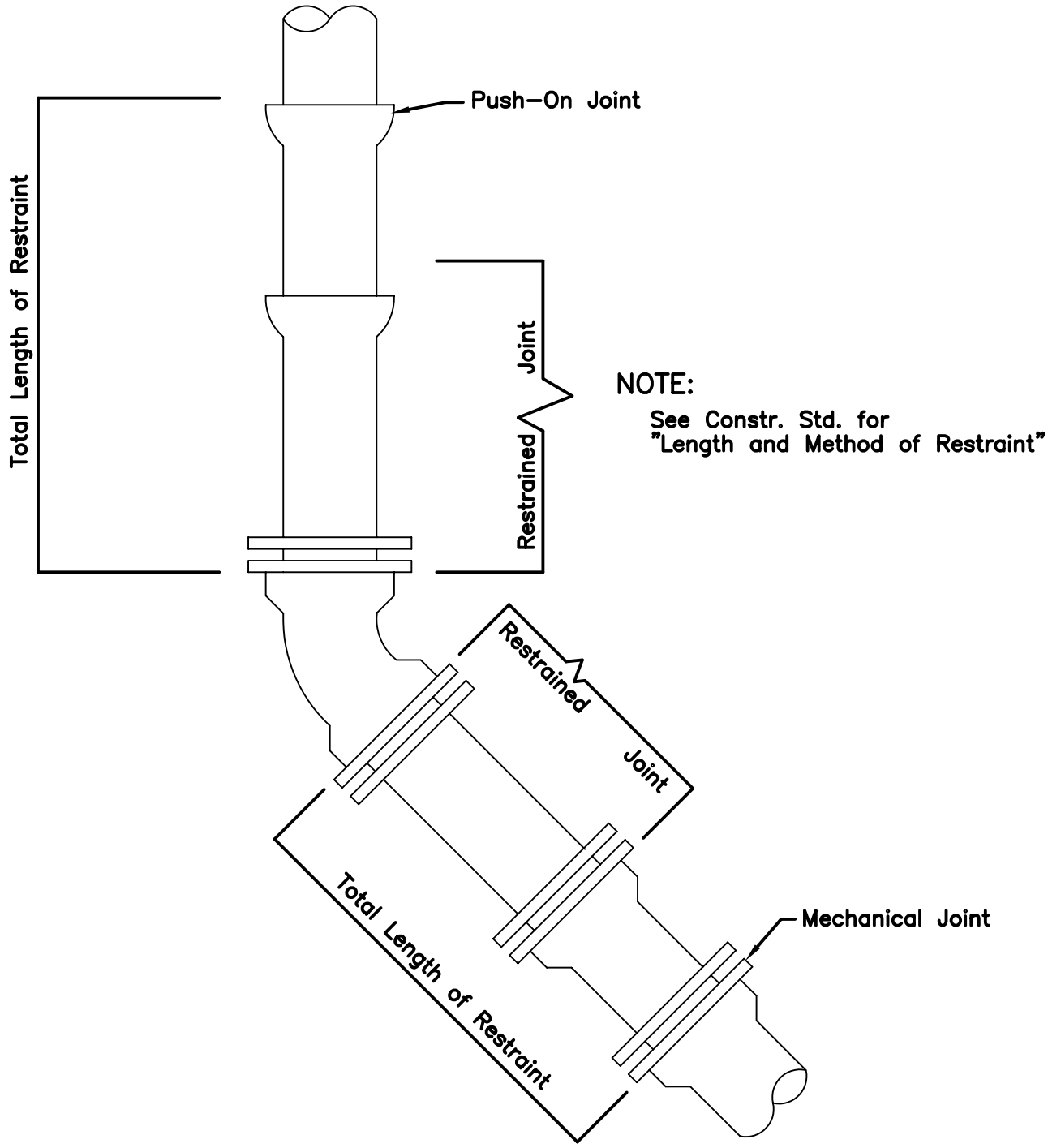

NOTE:
See Constr. Std. for
"Length and Method of Restraint"

NOTE:
Restraint Required for Force Main & Pressure Sewer Pipe Only

BATESVILLE WASTEWATER UTILITY

SANITARY SEWER CONSTRUCTION DETAILS		
RESTRAINT OF BENDS		
SCALE: NONE	DATE: AUG. 2004	DWG. NO. S-10

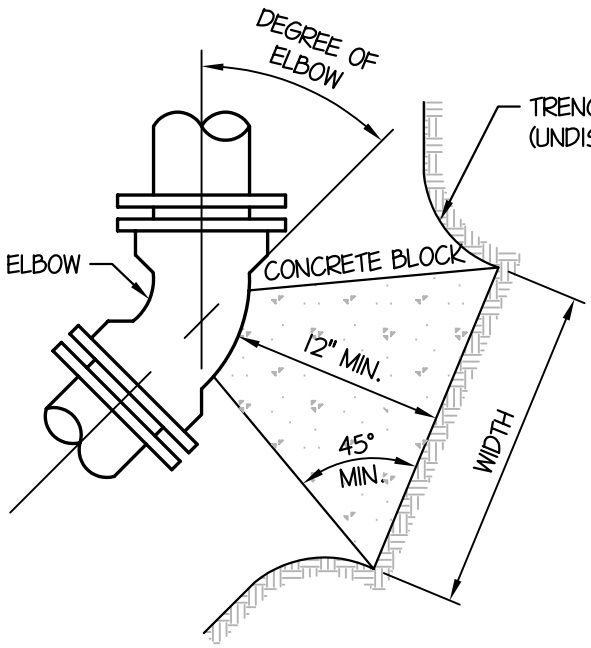

PLAN VIEW

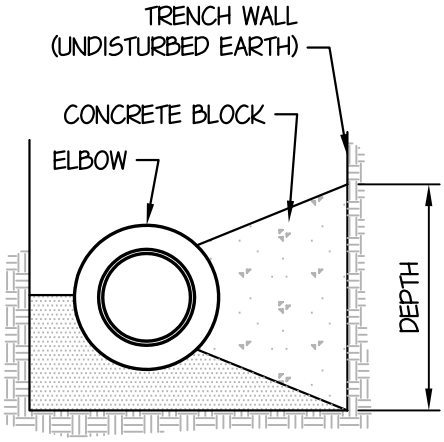

SECTION VIEW

SIZE	11°15'		22°30'		45°		90°	
	W	D	W	D	W	D	W	D
4"	9"	9"	1'-0"	9"	1'-6"	1'-3"	2'-9"	1'-3"
6"	1'-0"	1'-0"	2'-0"	1'-0"	2'-6"	1'-6"	4'-3"	1'-6"
8"	1'-3"	1'-3"	2'-0"	1'-9"	3'-9"	1'-9"	6'-0"	2'-0"
10"	1'-9"	1'-6"	3'-0"	1'-9"	4'-0"	2'-6"	6'-3"	2'-6"
12"	2'-0"	1'-9"	3'-6"	2'-0"	4'-9"	3'-0"	7'-3"	3'-0"
16"	2'-9"	2'-3"	5'-6"	2'-3"	6'-0"	4'-0"	11'-3"	4'-0"
20"	3'-3"	2'-9"	5'-9"	3'-3"	7'-6"	5'-0"	13'-9"	5'-0"
24"	4'-6"	3'-0"	6'-9"	4'-0"	9'-0"	6'-0"	16'-6"	6'-0"

NOTE:
CONCRETE SHALL BE KEPT A SUFFICIENT DISTANCE FROM JOINT FOR REMOVAL OF ALL JOINT ACCESSORIES INCLUDING BOLTS, AND SHALL BE OF A MIX NOT LEANER THAN 1 PART CEMENT TO 2 PARTS SAND AND 5 PARTS STONE AND HAVING A COMPRESSIVE STRENGTH OF NOT LESS THAN 2500 psi AFTER 28 DAYS.

RESTRAINT REQUIRED FOR FORCE MAIN AND PRESSURE SEWER

BATESVILLE WASTEWATER UTILITY

SANITARY SEWER CONSTRUCTION DETAILS

RESTRAINT BLOCK SIZES FOR VARIOUS DEGREES OF ELBOWS & SIZES OF PIPES

SCALE: NONE | DATE: AUG. 2004 | DWG. NO. SS-11

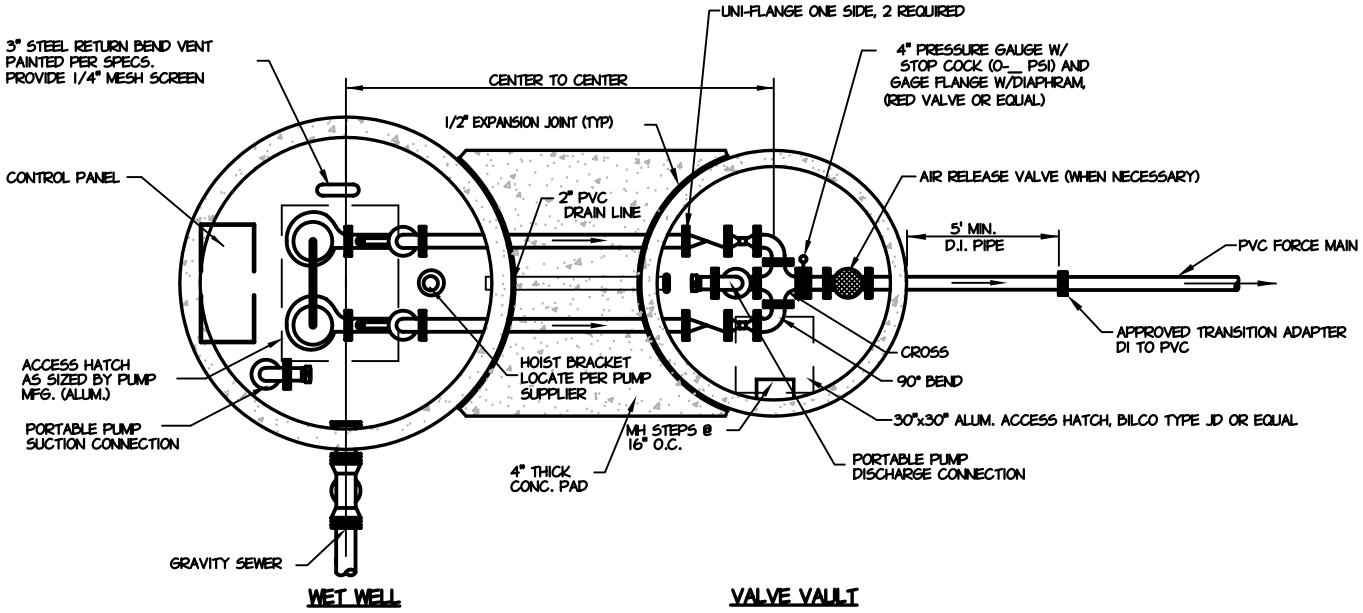

BATESVILLE WASTEWATER UTILITY

SANITARY SEWER CONSTRUCTION DETAILS

TYPICAL LIFT STATION PLAN VIEW

SCALE: NONE	DATE: AUG. 2004	DWG. NO. SS-12

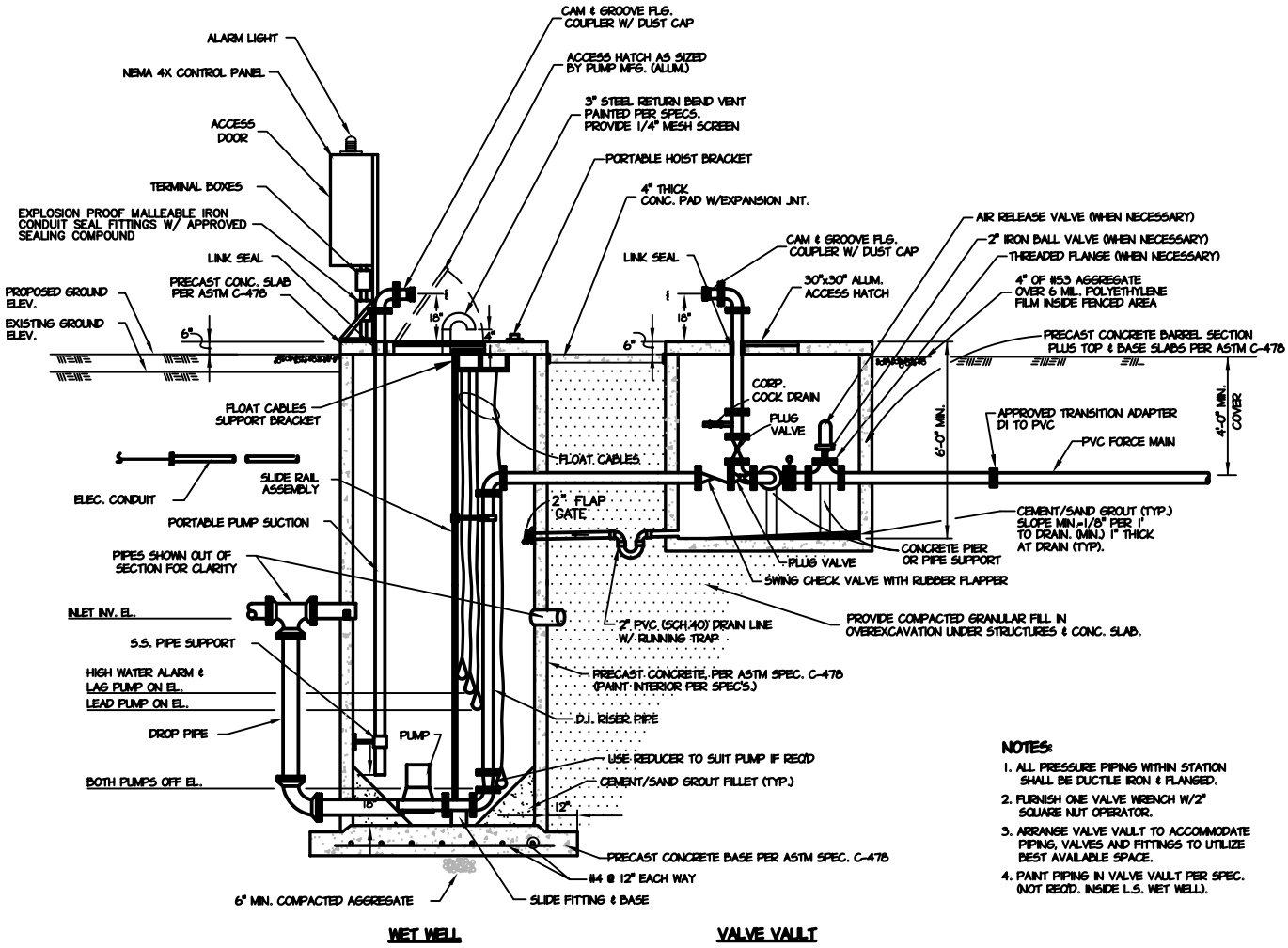

NOTES:

1. ALL PRESSURE PIPING WITHIN STATION SHALL BE DUCTILE IRON & FLANGED.
2. FURNISH ONE VALVE WRENCH W/2" SQUARE NUT OPERATOR.
3. ARRANGE VALVE VAULT TO ACCOMMODATE PIPING, VALVES AND FITTINGS TO UTILIZE BEST AVAILABLE SPACE.
4. PAINT PIPING IN VALVE VAULT PER SPEC. (NOT REQ'D. INSIDE L.S. WET WELL).

BATESVILLE WASTEWATER UTILITY

SANITARY SEWER CONSTRUCTION DETAILS

TYPICAL LIFT STATION SECTION VIEW

SCALE: NONE	DATE: AUG. 2004	DWG. NO. SS-13

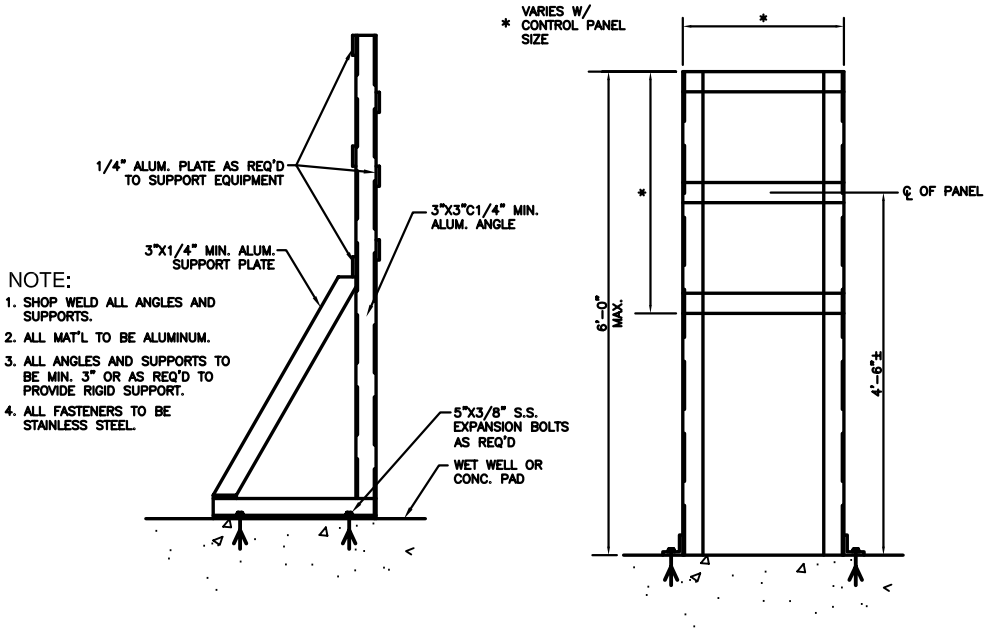

NOTE:

1. SHOP WELD ALL ANGLES AND SUPPORTS.
2. ALL MAT'L TO BE ALUMINUM.
3. ALL ANGLES AND SUPPORTS TO BE MIN. 3" OR AS REQ'D TO PROVIDE RIGID SUPPORT.
4. ALL FASTENERS TO BE STAINLESS STEEL.

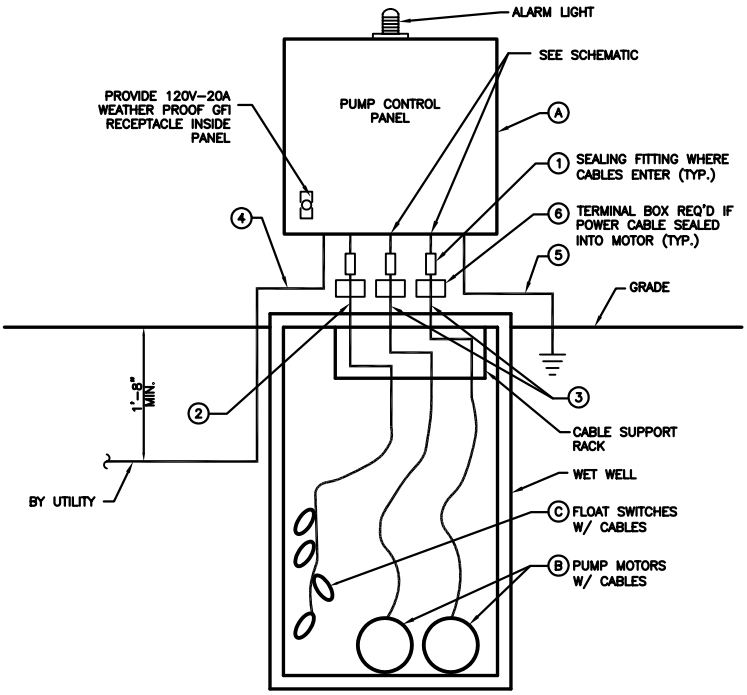

CONTROL PANEL ENTRANCE NOTES:

1. SEALING FITTING W/SEALING COMPOUND. (CROUSE-HINDS EYS SERIES OR EQUAL).
2. CONDUIT (2") W/ FLOAT CABLES. END OF CONDUIT IN WET WELL TO HAVE END BELL. SECURE CABLES TO SUPPORT RACK W/ PLASTIC TIES.
3. 2" CONDUIT W/ PUMP POWER/SENSOR CABLE.
4. 2" CONDUIT FROM METER TO CONTROL PANEL.
5. #6 CU. GROUND CONDUCTOR IN 3/4" C. TO 3/4"X10' COPPER CLAD/STEEL GROUND ROD.
6. TERMINAL BOX (IF REQ'D) – CARLON NL1086 W/ BACKPANEL JP108 & W/ TERMINALS MOUNTED ON BACKPANEL. TERMINALS (8 REQ'D) TO BE SQUARE "D" CLASS 9080, TYPE M16/12G W/ MFEM12 BARRIER MOUNTED ON MH-220 TRACK W/ MH-10 END CAPS (FOR WIRE SIZE #14 THRU #4). IDENTIFY TERMINALS TO MATCH DESIGNATIONS IN THE PUMP STATION CONTROL PANEL.

LIFT STATION ELECTRICAL KEYED NOTES:

A. PUMP CONTROL PANEL – CONNECT BRANCH CIRCUITS FOR DIALER.
B. PUMP MOTORS ARE FURNISHED W/ POWER AND CONTROL CABLES.
C. LEVEL SENSING FLOAT SWITCHES ARE FURNISHED WITH CABLES.

BATESVILLE WASTEWATER UTILITY

SANITARY SEWER CONSTRUCTION DETAILS

TYPICAL CONTROL PANEL SUPPORT DETAIL
TYPICAL LIFT STATION ELECTRICAL RISER DIAGRAM

SCALE: NONE	DATE: AUG. 2004	DWG. NO. SS-14

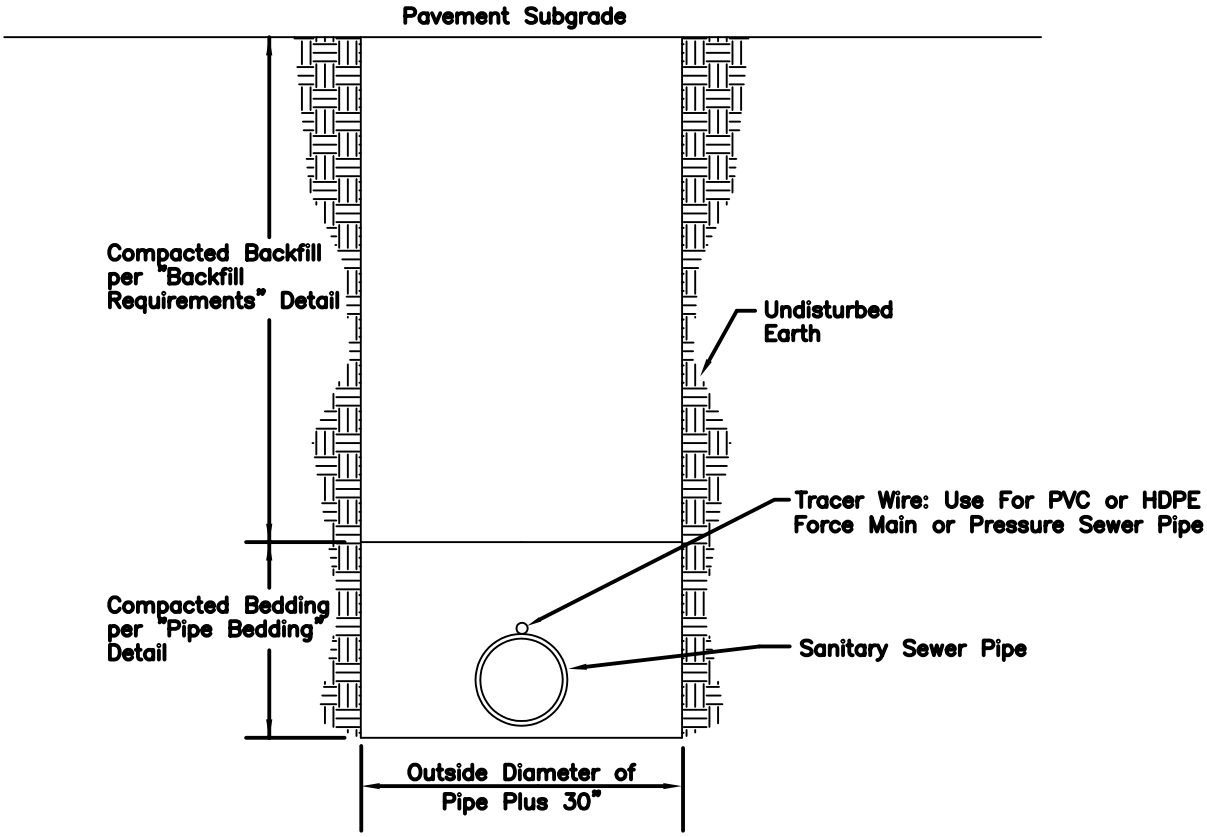

BATESVILLE WASTEWATER UTILITY

SANITARY SEWER CONSTRUCTION DETAILS

SEWER TRENCH DETAIL

SCALE: NONE	DATE: AUG. 2004	DWG. NO. SS-15

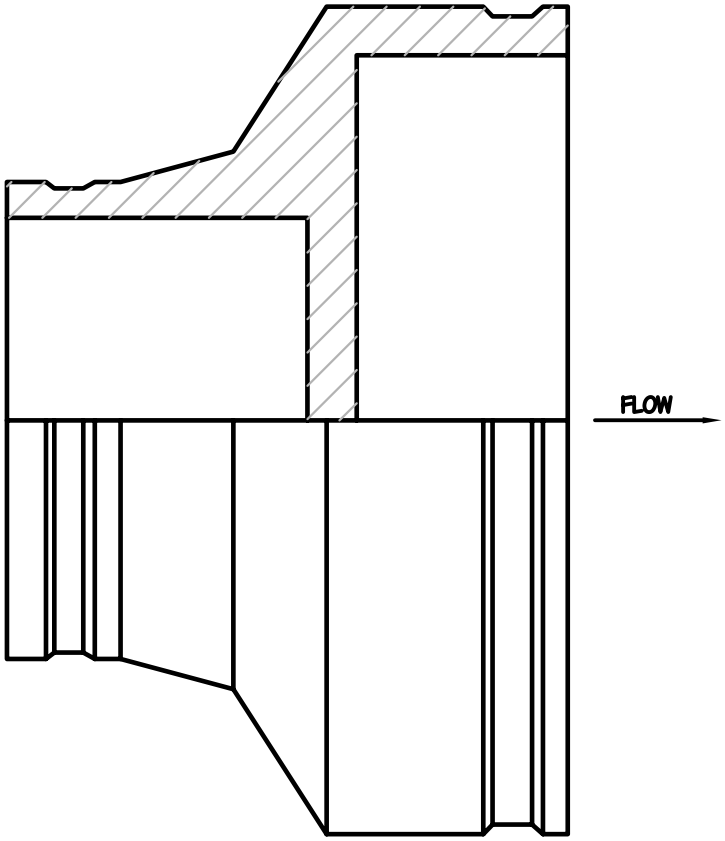

NOTE:

EACH COUPLING TO HAVE TWO 302 STAINLESS STEEL ADJUSTABLE BANDS

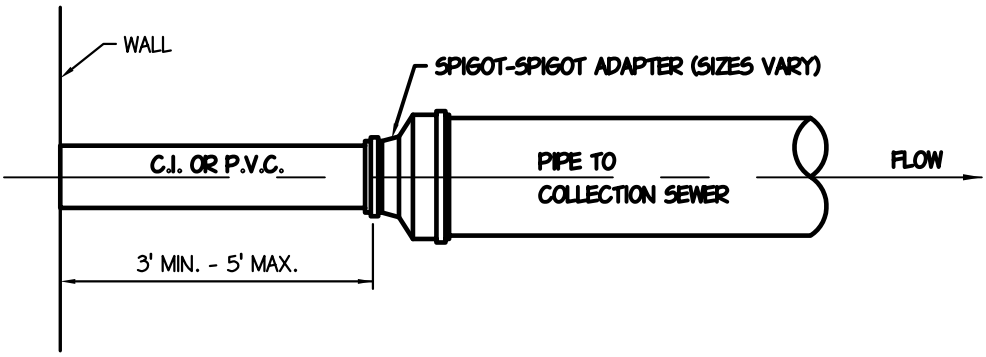

BATESVILLE WASTEWATER UTILITY

SANITARY SEWER CONSTRUCTION DETAILS

DISSIMLAR PIPE SIZE TAP CONNECTION

SCALE: NONE	DATE: AUG. 2004	DWG. NO. SS-16

NOTE: TEMPORARY PLUG SUITABLE FOR AIR TEST. PLACE 5' BEYOND PROPERTY LINE OR TO EASEMENT LINE.

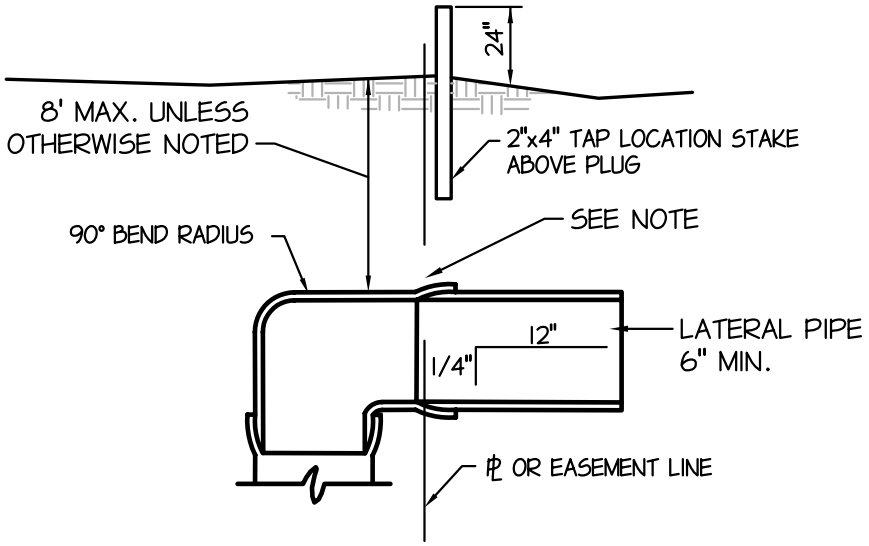

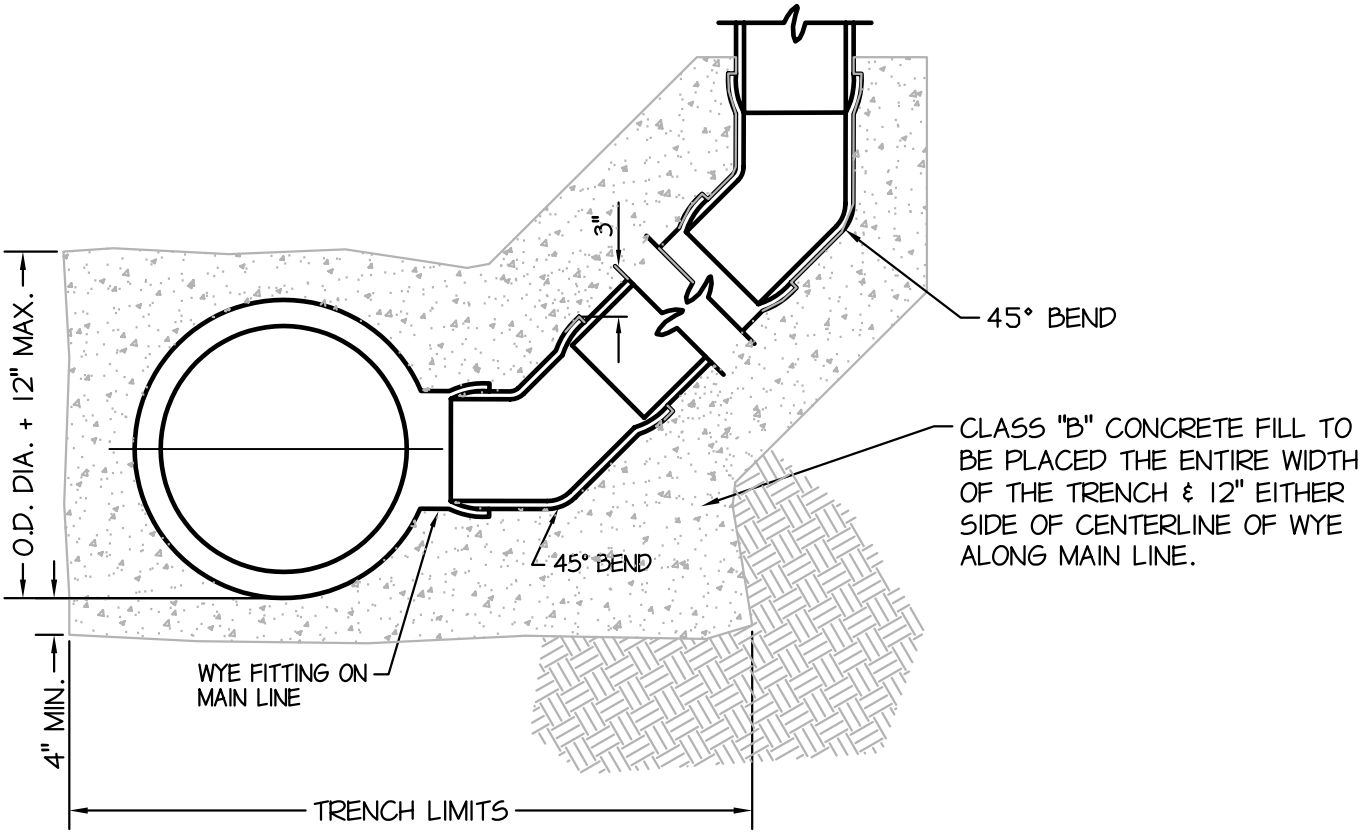

BATESVILLE WASTEWATER UTILITY

SANITARY SEWER CONSTRUCTION DETAILS		
TYPICAL LATERAL DETAIL FOR SEWERS DEEPER THAN 14'		
SCALE: NONE	DATE: AUG. 2004	DWG. NO. SS-17

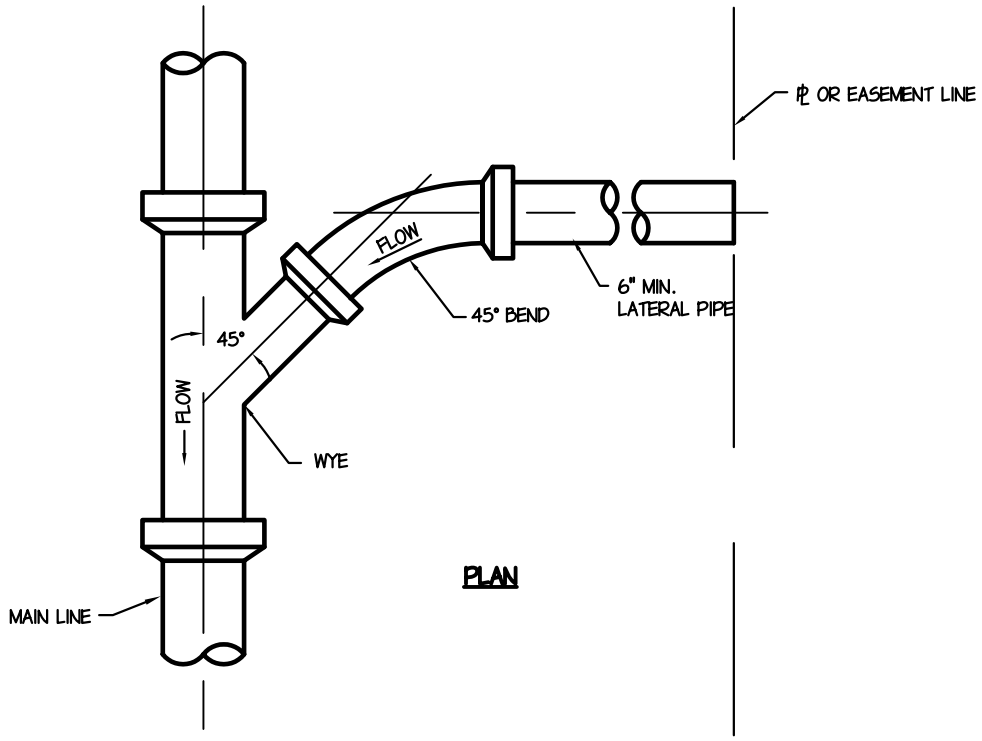

PLAN

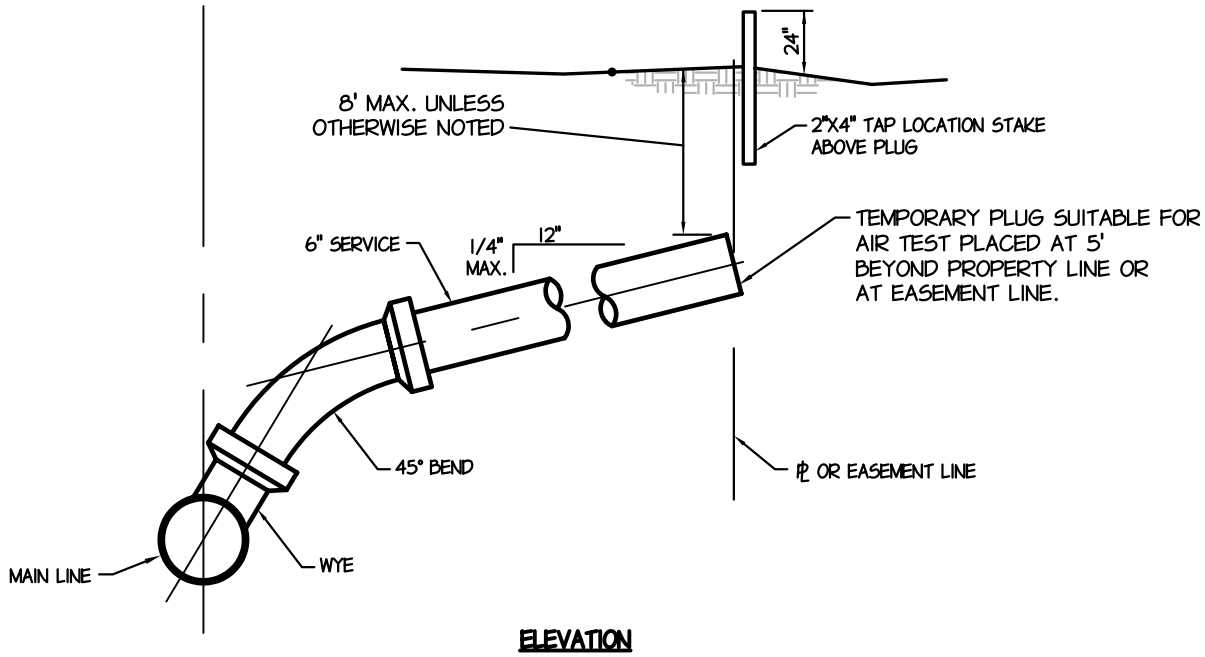

ELEVATION

BATESVILLE WASTEWATER UTILITY

SANITARY SEWER CONSTRUCTION DETAILS

TYPICAL LATERAL DETAIL FOR SEWERS LESS THAN 14' DEEP

SCALE: NONE	DATE: AUG. 2004	DWG. NO. SS-18

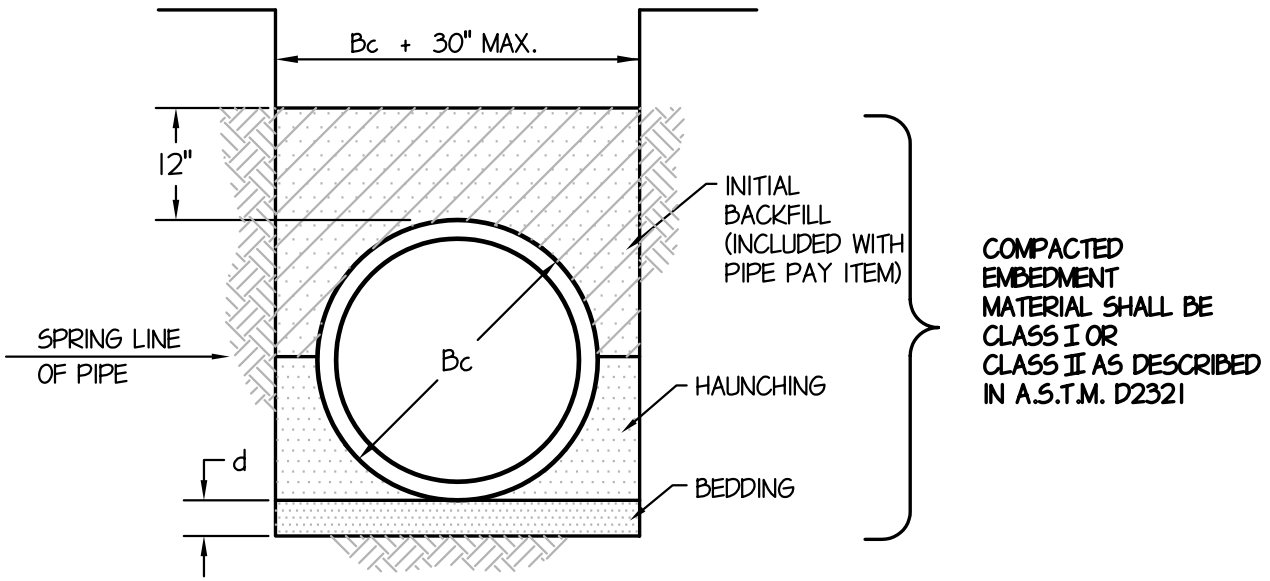

GRANULAR FOUNDATION

DEPTH OF BEDDING MATERIAL BELOW PIPE	
D	d(MIN.)
27" & SMALLER	4"
30" TO 60"	4"
66" & LARGER	6"

LEGEND

Bc = OUTSIDE DIAMETER

D = INSIDE DIAMETER

d = DEPTH OF BEDDING MATERIAL BELOW PIPE BELL

NOTE:

FOR ROCK OR OTHER NON-COMPRESSABLE MATERIAL: THE TRENCH SHOULD BE OVER-EXCAVATED A MIN. OF 6" & REFILLED WITH BEDDING MATERIAL.

BATESVILLE WASTEWATER UTILITY

SANITARY SEWER CONSTRUCTION DETAILS

FLEXIBLE SEWER PIPE BEDDING DETAIL (CLASS I & II)

SCALE: NONE	DATE: AUG. 2004	DWG. NO. SS-19

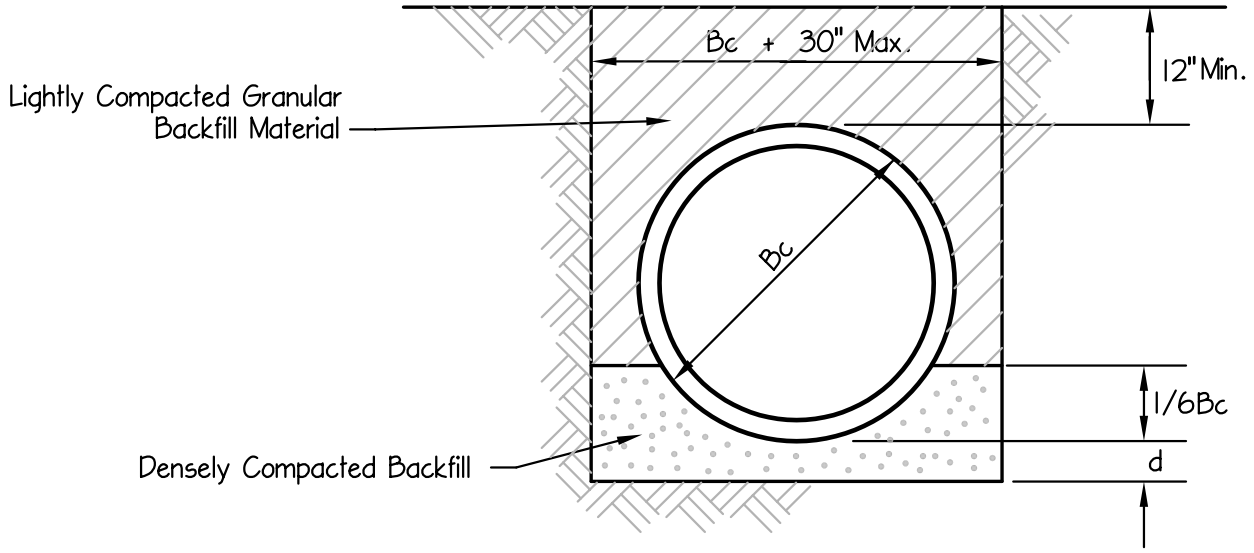

GRANULAR FOUNDATION

DEPTH OF BEDDING MATERIAL BELOW PIPE	
D	d(MIN.)
27" & SMALLER	3"
30" TO 60"	4"
66" & LARGER	6"

LEGEND

Bc = OUTSIDE DIAMETER

D = INSIDE DIAMETER

d = DEPTH OF BEDDING MATERIAL BELOW PIPE BELL

NOTE:

For Rock or Other Non-Compressable Material:
The Trench should be over-excavated a min. of 6" & refilled with Bedding Material.

BATESVILLE WASTEWATER UTILITY

SANITARY SEWER CONSTRUCTION DETAILS

RIGID PIPE BEDDING DETAIL (CLASS "C")

SCALE: NONE	DATE: AUG. 2004	DWG. NO. SS-20

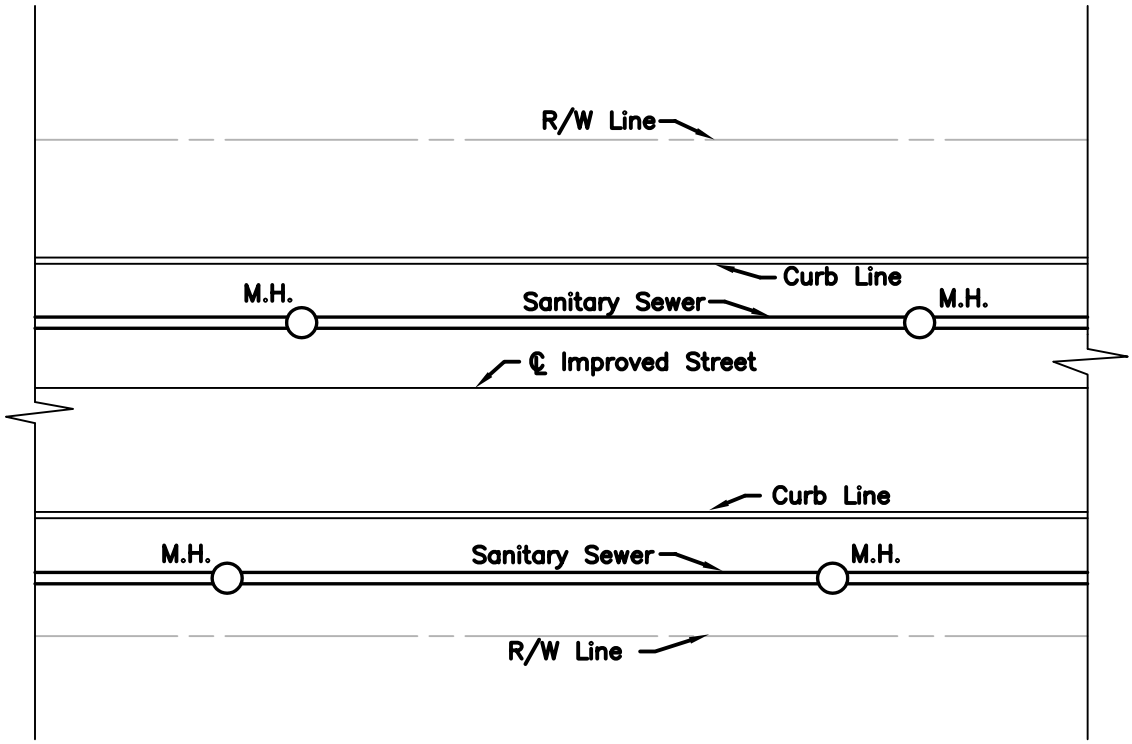

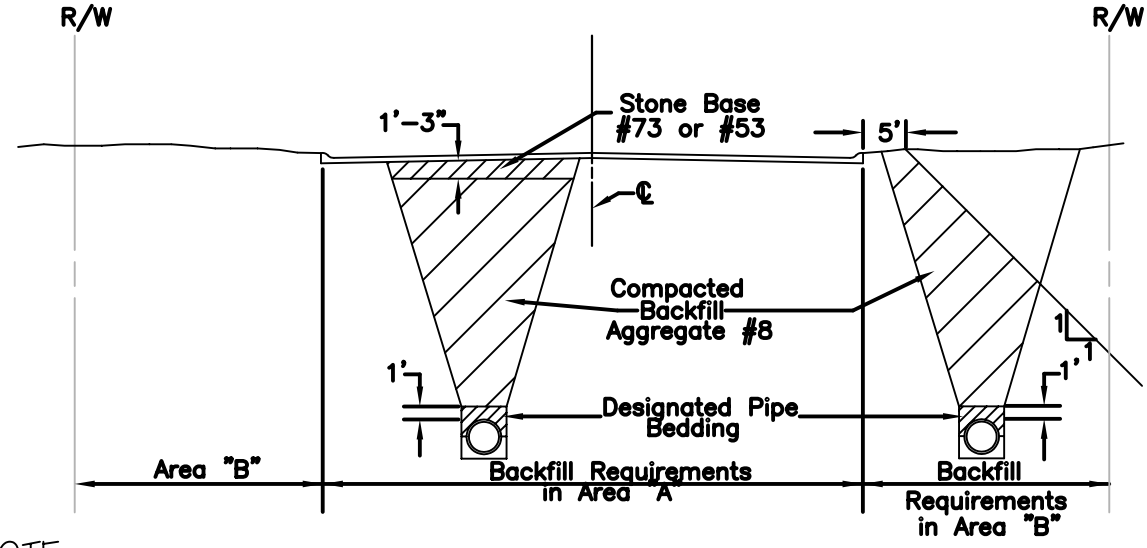

NOTE:
PLACE A FABRIC LAYER ON TOP OF THE #8 STONE PRIOR TO PLACEMENT OF THE COMPACTED #53 OR #73 STONE BASE

(FOR PIPE LINES WITHIN RIGHT OF WAY FOR IMPROVED STREETS)

BATESVILLE WASTEWATER UTILITY

SANITARY SEWER CONSTRUCTION DETAILS

BACKFILL REQUIREMENTS
(WITHIN R/W FOR IMPROVED STREETS)

SCALE: NONE	DATE: AUG. 2004	DWG. NO. SS-21

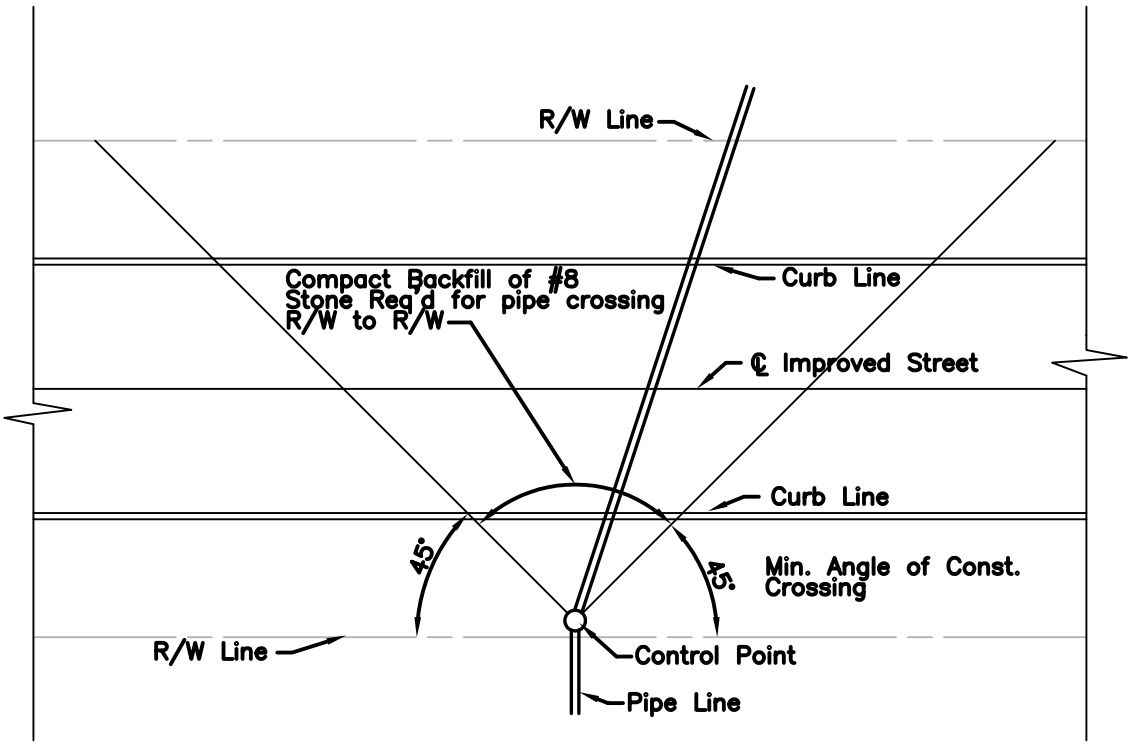

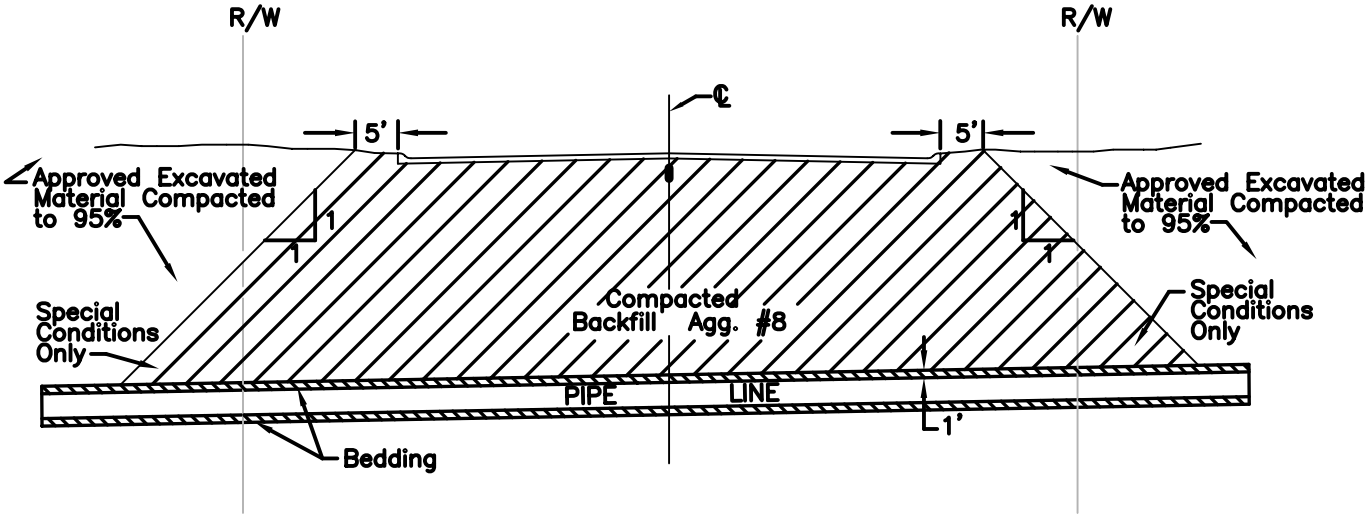

NOTE:
PLACE A FABRIC LAYER ON TOP OF THE AGGREGATE #8 STONE PRIOR TO PLACEMENT OF THE COMPACTED #53 OR #73 STONE BASE
(FOR PIPE LINES CROSSING RIGHT OF WAY FOR IMPROVED STREETS)

BATESVILLE WASTEWATER UTILITY

SANITARY SEWER CONSTRUCTION DETAILS

BACKFILL REQUIREMENTS
(FOR CROSSING R/W FOR IMPROVED STREETS)

SCALE: NONE	DATE: AUG. 2004	DWG. NO. SS-22